Adelanto Public Utility Authority

SEWER STANDARDS

October 2003

STANDARD SPECIFICATIONS
FOR THE
FURNISHING OF MATERIALS AND THE
CONSTRUCTION OF SANITARY SEWERS

ADELANTO PUBLIC UTILITY AUTHORITY

11600 AIR EXPRESSWAY

ADELANTO, CALIFORNIA 92301

P.O. BOX 10

ADELANTO, CALIFORNIA 92301

OCTOBER 2003

TABLE OF CONTENTS

Section		
	General Requirements	
	1-01 Definitions	1-1 1
	1-02 Conditions	1-1 1
	1-03 Supervision and Inspection	1-1
	1-04 Defective Work or Materials	1-2
	1-05 Maintenance of Existing Improvements	1-2
	1-06 Proximity to Wells and Water Lines	2 1
	1-07 As-Built Drawing	1-2
2	Materials	
	2-01 General	2-1
	2-02 Vitrified Clay Pipe (VCP)	2-1
	2-03 Polyvinyl Chloride (PVC) Plastic Sewer Pipe	.2-2
	2-04 Acrylonitrile-Butadiene-Styrene c (ABS) Solid Wall Pipe	2-2
	2-05 ABS or PVC Composite Pipe	2-3
	2-06 Ductile Iron (Dl) Pipe	2-3
	2-07 Wyes and Tees	2-3
	2-08 Steel Casing for Bored Crossings	2-4
	2-09 Concrete	2-4
	2-10 Castings	2-5
	2-11 Manholes, Precast	2-5
	2-12 Crushed Rock Bedding	2-5
3	Methods of Construction	
	3-01 Excavation, Trenching and Backfill	3-1
	3-02 Pipe Laying	3-5
	3-03 Pipe Jointing	3-6
	3-04 Separate Wyes	3-8
	3-05 Chimney Pipes	3-9
	3-06 House Connections	3-9
	3-07 Manholes	3-9
	3-08 Dead Ends	3-10
	3-09 Bored Crossings	3-10
	3-10 Concrete Work	3-11
	3-11 Tests	3-11
4	Pavement Replacement	
	4-01 General	4-1
	4-02 Construction Methods	4-1
	4-03 Base Material	4-2
	4-04 Pavement Repair	4-2
	4-05 Finish Paving	4-3
	4-06 open Graded Paving	4-4
	4-07 Bitumious Seal Coat	4-4
	4-08 Manhole Paving	4-4
	4-09 County Roads and State Highways	4-4

TABLE OF CONTENTS (con't)

Section	Title	
5	Public Convenience and Safety	
	5-01 Public Convenience	5-1
	5-02 Public Safety	5-1
6	Guarantee	6-1

PLATES

Plate No.	Title
I	Legend
II	Precast Reinforced Concrete Manhole
II	Deleted
IV	Drop Manhole
V	Manhole Frame and Cover VI Dead End -VCP Pipe
VI	Dead End –VCP Pipe
VI-A	Dead End PVC & ABS Pipe
VII	Dead End Frame and Cover
VIII	Chimney Pipe
IX	House Connection
X	Pavement Repair -Trench Example
XI	Pavement Repair -Overlay Example

SECTION 1

GENERAL REQUIREMENTS

1-01 DEFINITIONS

The word "City" shall mean the City of Adelanto.
The word "Council" or words "City Council" shall mean the City Council of Adelanto.

The words "City Engineer" shall mean a civil engineer registered as such in the State of California appointed by the City acting either directly or through his properly authorized agents, assistants, inspectors and superintendents.

The word "Contractor" shall mean the person, persons, partnership or corporation duly licensed as such in the State of California to enter into a contract for the performance of the work required.
The word "Plates" shall mean collectively all of the Plates attached to and accompanying these specifications and made a part hereof.

1-02 CONDITIONS

On all questions relating to the acceptability of the material, machinery or plant equipment, classification of material or work, the proper execution, progress of sequence of the work, quantities and the interpretation of the specifications or drawings, the decision of the City Engineer shall be final and binding.

The Contractor shall obtain copies of and comply with all applicable current statutes, laws, ordinances, rules, regulations and specifications of the United States Government, the State of California, the County of San Bernardino, the City of Adelanto and any other governmental agencies having jurisdiction and shall make application of all required permits and bear the cost of same.

The Contractor shall furnish to the City, copies of all required permits and licenses prior to initiation of the work. Upon completion of the work, the Contractor shall supply to the City a letter of approval from the governing body having jurisdiction that the Contractor has met the requirements and conditions of the permits or licenses.

1-03 SUPERVISION AND INSPECTION

The City Engineer shall decide within the provisions of the specifications all questions which may arise concerning the quality or acceptance of materials furnished and work performed. The Contractor shall be solely

and completely responsible for conditions on the job site, including safety to all persons and property during performance of work. This requirement shall apply continuously and completely and not be limited to normal working hours.

1-04 DEFECTIVE WORK OR MATERIALS

No work which is defective in its construction or deficient in any of the requirements of these specifications will be considered as acceptable in consequence of the failure of any inspector connected with the work to point out said defects or deficiency during construction. The Contractor shall correct any imperfect work, without compensation from the City, before final acceptance of the work by the City.

All materials not conforming to the requirements of these specifications shall be considered as defective. They shall be rejected, whether in place or not, and shall be removed immediately from the site of the work by the Contractor at his expense. No rejected material, the defects of which have subsequently corrected, shall be used until approval in writing has been given by the City Engineer.

1-05 MAINTENANCE Of EXISTING IMPROVEMENTS

Unless otherwise indicated on the plans or in these specifications, or unless otherwise cared for by the owner of a public utility or franchise, all water, gas, oil or irrigation lines, lighting, power or telephone conduits or wires or sewer lines, structures or house laterals in place, and other surface or sub-surface structures or lines, shall be maintained by the Contractor and shall not be disturbed, disconnected or damaged by him during the progress of the work; provided, that should the Contractor in the performance of the work disturb, disconnect or damage any of the above, all expenses, of whatever nature arising from such disturbance or in the replacement or repair thereof shall be borne by the Contractor.

1-06 PROXIMITY To WELLS AND WATER LINES

Where sanitary sewers and house connections are to be constructed within a 100-foot radius of a water well, types of pipe and joints shall be reviewed with the State Health Department for their recommendation and approval. If the horizontal separation between parallel sewer and water lines must be less than 10 feet or if the sewer crosses shallower than one foot below the water main, special construction is required by the State Department of Health Services and must be approved by the City.

1-07 AS-BUILT DRAWINGS

The Contractor shall keep a separate set of construction plans upon which he shall designate in appropriate markings, as-built conditions using sufficient sketches to properly delineate locations of manholes,

laterals and other pertinent items. Wyes and tees shall be referenced by m nearest downstream manhole. Lateral ends shall be distance from nearest downstream manhole. All measurements shall be accurate within one foot. Prior to filing of the Notice of he Contractor shall certify as to the as-built conditions in a letter transmitting the plans and sketches to the City.

SECTION 2

MATERIALS

2-01 GENERAL

All material shall be new and unused. Vitrified clay pipe, polyvinyl chloride plastic pipe or acrylonitrile-butadine-styrene (ABS) or PVC composite pipe shall be used for sewer mains, except where ductile cast iron pipe is required for special conditions.

Vitrified clay pipe, polyvinyl chloride plastic pipe or ABS solid wall pipe shall be used for house connections.

Manholes shall be constructed of poured in place concrete bases and pre-cast reinforced concrete sections. Pre-cast concrete manhole bases will be considered on a case by case basis upon submittal of request and data.

The reference to specifications for the various materials shall include, in addition to the basic specifications referred to, all applicable amendments to the specifications and all emergency alternate specifications, which have been promulgated and are in effect. Whenever a material, article, or piece of equipment is identified on the plans or in the specifications by reference to manufacturers' or vendors. names, trade names, catalogue numbers, etc., it is intended generally to establish a standard; and, any material, article, or equipment of other manufacturers and vendor~ which will perform adequately the duties imposed by the general design will be considered equally acceptable provided the material, article, or equipment so proposed, is in the opinion of the City, of equal substance and function. It shall not be purchased or installed without the City's written approval.

2-02 VITRIFIED CLAY PIPE (VCP)

Pipe shall conform to American Society for Testing and Materials (ASTM) Standard C 700, latest Revision entitled .'Vitrified Clay Pipe, Extra Strength, Standard Strength and Perforated", for either plain-end and bell and spigot type extra strength vitrified clay pipe. Only EXTRA STRENGTH vitrified clay pipe shall be used.

Jointing of vitrified clay pipe shall conform to ASTM C 425, latest revision, entitled "Compression Joints for Vitrified Clay Pipe and Fittings", with the following exceptions:

Band for attached rubber coupling and tensioning mechanism shall be fabricated from stainless steel.

For pipe 8 inches in diameter and larger corrosion resistant shear rings are required on Banded Rubber Couplings.

2-03 POLYVINYL CHLORIDE (PVC) PLASTIC SEWER PIPE

Polyvinyl chloride pipe shall comply with ASTM D 3034, latest revision entitled "Type PSM Poly (Vinyl Chloride) (PVC) Sewer Pipe and Fittings" or ASTM F 679 entitled "Poly (Vinyl Chloride) (PVC) Large - Diameter Plastic Gravity Sewer Pipe and Fittings". Four through 15 inch pipe shall have a maximum standard dimension ratio (SDR) of thirty-five (35). Large diameter pipe shall have a minimal wall thickness of "T-I".

PVC plastic pipe and fittings shall be made of PVC plastic having a cell classification of 12454-8, 12454-C or 13364-8 as defined in ASTM D 1784.

Elastomeric gasket joints shall be used for joining PVC sewer pipe except house connection sewers. The critical sealing dimensions of the bell, spigot and gasket shall be in accordance with the manufacturer's standard dimensions and tolerances. The elastomeric compound shall comply with the physical properties specified in ASTM D 1869. The gasket shall provide an adequate compressive force against the sealing surfaces of the bell and spigot so as to affect a positive seal under all combination of the joint tolerances. The gasket shall be the only element dependent upon to make the joint flexible and watertight.

Whenever possible, the manufacturer's maximum standard length of pipe shall be used.

Solvent cement joints shall be allowed only on house connection sewers and when installing saddles on sewer mains. The solvent cement shall be in accordance with ASTM D 2564.

All fittings and accessories shall be as manufactured by the pipe supplier and be of equal material of the pipe supplied and have bell and spigot configurations identical to that of the pipe.

2-04 ACRYLONITRILE-BUTADIENE-STYRENE (ABS) SOLID WALL

Pipes smaller than eight inches in diameter shall be solid wall pipe. The pipe, fittings, and joints shall comply with ASTM D 2751. Minimum wall thickness shall correspond with SDR 35. Joints shall be gasketed except for house connection sewers.

Chemically welded joints shall be made in conformance with the pipe manufacturer's recommendations. Both a primer and a cement shall be used when recommended by the manufacturer. Joint solvent shall be an ABS cement conforming to ASTM D 2235. Gaskets shall conform to applicable provisions of ASTM D 1869.

2-05 ABS OR PVC COMPOSITE PIPE

ABS or PVC composite pipe, fittings and joints shall comply with ASTM D 2680. The pipe shall consist of two concentric extended thermoplastic tubes integrally connected by webs to form a circular truss. The longitudinal void spaces shall be filled with inert material. The maximum average ID of the pipe, as determined by ASTM D 2122, shall be:

Nominal Size Inches	Maximum Average ID Inches
8	7.90
10	9.88
12	11.83
15	14.80

ABS and PVC resins and joint cements shall conform to the respective materials specified above for ABS solid wall and PVC plastic sewer pipe.

Pipe which is not installed within 120 days of the lot tests shall not be used without prior approval of the City Engineer.

2-06 DUCTILE IRON (DI) PIPE

Ductile iron pipe and fittings shall be cement mortar lined. Pipe joints shall be mechanical joint or push-on type. Applicable sections of the following standards apply.

Standard	Item
AWWA C 151	Ductile Iron Pipe
AWWA C 104	Cement Motar Lining
AWWA C 110	Fittings
AWWA C 111	Rubber Gasket Jointse

2-07 WYES AND TEES

Wyes and tees for house connections or future connections shall be as manufactured by the pipe supplier and be of a material of the pipe supplied. Where necessary to cut-in wyes or tees on existing mains, the mains may be saddled. Sewer saddles shall be properly designed for the types of main. Each saddle shall be clearly marked with its size and type main to which it is to be applied.

The cast iron saddles for VCP and DI pipe shall be provided with a groove to accommodate a rubber O-ring gasket cemented in place so as to be an integral part of the saddle. The saddle shall be provided with a stainless steel band and non-corrosive hardware for firmly attaching to sewer main.

ABS or PVC saddles may be chemically welded or solvent cemented to like sewer mains; however, they shall also be secured with two stainless steel straps.

2-08 STEEL CASING FOR BORED CROSSINGS

Steel pipe shall be a minimum one-quarter (1/4) inch thick wall for 12 inch to 20 inch nominal diameters and a minimum three eights (3/8) inch thick wall for pipe sizes up to 36 inch nominal diameter or in accordance with the requirements of the governing agency whichever is greater, and shall be manufactured in accordance with American Water Works Association (AWWA). Standard C200, latest revision entitled "AWWA Standard for Steel Water Pipe 6 Inches and Larger". The casing shall be round and straight, free from protruding bolts, rivets or welds, and shall have an inside diameter of not less than the maximum diameter of the sewer plus six (6) inches. The ends of the Steel Casing Pipe to be jacked or bored into place shall be prepared to withstand pressures created by jacking the pipe into place.

2-09 CONCRETE

a. Portland Cement shall conform to ASTM C 150, latest revision, entitled "Portland Cement", and shall be Type lor II. Cement in containers that have been broken in shipment or handling may be used only if approved by the City Engineer.

b. Sand shall consist of well-graded, natural or artificially washed sand~t has clean, hard strong matter. Sand shall not contain over three (3) percent clay or silt by weight.

c. Coarse Aggregate shall consist of gravel, or a combination of gravel and crushed rock, having clean, hard, tough, durable and uncoated alkali, oil, organic or other deleterious substances. Aggregate shall be properly graded, from 1/4 inch to 1-1/2 inch in size, to secure the required compressive strength concrete.

d. Water shall be clean, free from injurious amounts of oil, acids, organic matter or other injurious substance.

Only sufficient water shall be used to produce a concrete with a slump of not to exceed 4 inches, as determined by ASTM C 143, latest revision. The total volume of sand and coarse aggregate measures separately shall not exceed 6 cubic feet per sack of cement. Concrete shall be placed within 30 minutes of mixing and no retempering will be permitted. Batch Slips shall be furnished by the Contractor when requested by the City Engineer, if Transit Mix Concrete is supplied. Unless otherwise specified, all concrete shall have a 28-day compressive strength of 2,500 psi minimum and shall contain 5.5 sacks of cement per cubic yard of concrete.

2-10 CASTINGS

Manhole frames and covers for City sewers shall be furnished in accordance with Plate V, and shall be furnished with a 32-inch diameter overall base, a 24-inch clear opening a 5-inch frame height, a diamond pattern cover with letter designations "SEWER", weighting not less than 385 pounds in place and shall be of traffic strength. The seat shall be beveled of the non-rocking type with covers and frames machined and matched to fit snugly. The frames and covers shall be painted with one coat of bituminous paint. Covers and frames shall be Alhambra Foundry No. A-1590 or equal, subject to the above specification, the Plate and the approval of the City.

2-11 MANHOLES, PRECAST

Precast manholes shall be of reinforced concrete manufactured to meet ASTM C 478 latest revision entitled "Precast Reinforced Concrete Manhole Sections", and shall be 48 inches in diameter unless otherwise specified (See Plate II).

2-12 CRUSHED ROCK BEDDING

Crushed rock bedding at locations designated by the City Engineer and required by the Contractor shall be sound, crushed aggregate of good stability, free from lumps or balls of clay, with 100% passing through a 3/4 inch U.S. Standard Series sieve and 0 to 20% passing a No.4 mesh sieve. All crushed rock shall be approved by the City Engineer.

SECTION 3

METHODS OF CONSTRUCTION

3-01 EXCAVATION, TRENCHING AND BACKFILL

A. General

The work covered by this portion of the specifications consists of the furnishing of all plant, labor equipment, appliances, and materials and the performance of all operations in connection with excavation, trenching, and backfilling for Sanitary Sewers and appurtenant structures, in strict accordance with the specifications and the applicable drawings.

In case of conflict in requirements for excavation, trenching and backfilling between these specifications and any statutes, law, ordinances, rules, regulations and specifications of any political subdivision or agency having jurisdiction, it shall be understood that the more exacting requirements shall govern. In general, these specifications will apply in City right-of-ways and easements and the aforementioned statutes, laws, ordinances, rules, regulations and specifications of any political sub-division or agency having jurisdiction will apply within the political boundaries or public right-of-ways to which they apply.

The Contractor shall perform all excavation of every description and of whatever substances encountered, to the depths and alignment indicated on the construction drawings or as otherwise specified. During excavation, material suitable for backfilling shall be piled in an orderly manner, a sufficient distance from the banks of the trench to avoid overloading and to prevent slides or cave-ins. All excavated materials not required or suitable for backfill shall be removed and wasted by the Contractor at the direction of the City Engineer.

Such grading shall be done as may be necessary to prevent surface water from flowing into trenches or other excavations. The Contractor shall remove, by pumping or other means approved by the City, any water accumulated in the trench from any source.

Suitable shoring, timbering or sheeting shall be provided by the Contractor where necessary to support the sides of the trench prior to and during the installation of the pipe. The shoring methods and procedure shall be consistent with safety and shall be removed as the trench is being backfilled.

Unless otherwise indicated, excavation shall be by open cut except that short sections of a trench may be tunneled if, in the opinion of the City Engineer, the pipe can be safely and properly installed and backfill can be properly tamped in such tunnel sections.

All spoil may be thrown on one side of the trench only to facilitate distribution and installation of pipe in such a manner that it will not endanger the work and will avoid obstructing roads and driveways. Adequate provisions shall be made for maintaining the flow of water cour- ses, drains, sewers or ditches crossing the trench, and upon completion of the work, they shall be restored to their original condition.

The use of trench digging machinery will be permitted except where its operations will cause damage to trees, buildings or existing structures above or below the ground. At such locations, hand methods shall be employed to avoid such damage. Trees, fences, poles and other property damaged shall be satisfactorily restored by the Contractor.

Cleated track-laying construction equipment shall not be permitted to operate on any paved surface unless fitted with smooth-faced street pads. All mechanical outriggers shall be fitted with rubber street shoes to protect the paving during excavations. Rubber-tired equipment only shall be used in backfill operations in paved areas. If the existing pavement is scarred, spalled, or broken, or if the pavement is marred, these portions of road shall be resurfaced over their entire travel lane width.

The Contractor shall provide his own access and proper clearance for installation of pipe in easements. Removal and disposal of all trees, stumps, roots, rush and other objectionable material shall be provided by the Contractor all in accordance with the approval of the City.

b. Trench Excavations

The width of the trench at and below the top of the pipe shall be such that the clear space between the barrel of the pipe and the trench wall shall not be less than 6 inches nor exceed 8 inches on either side of the pipe. The width of the trench above that level may be as wide as necessary for sheeting and bracing and the proper performance of the work. The bottom of the trench shall be graded and shaped so that the pipe shall rest firmly on undisturbed soil for the full length of the barrel except where it is necessary to excavate for bell holes and proper jointing operations. This part of the excavation shall be done manually, only a few feet in advance of the pipe laying, by men skilled in this type of work. Bell holes and depressions for joints shall be dug after the trench bottom has been graded and shall be only of such length, depth and width as necessary for properly making the particular type of joint. Except where rock or unsuitable materials is encountered, care shall be taken not to excavate below the depths indicated on the construction drawings.

Where the bottom of the trench is in rock or hard materials, the trench shall be excavated six (6) inches below grade as directed by the City Engineer or where the trench has been over excavated, the trench shall be refilled to the proper trench grade with crushed rock bedding as directed by the City Engineer.

Where the trench bottom requires the use of imported material under the pipe, because of soft, wet, spongy or unstable condition in the trench, a minimum thickness of twelve (12) inches crushed rock bedding shall be placed below grade of pipe invert for the full width of the trench.

c. Excavation for Appurtenances

Excavation for manholes and similar structures shall be sufficient to leave at least twelve (12) inches clear between their outer surfaces and the embankment or timber which may be used to hold and protect the banks. Excavations for other structures shall be made to the grades shown on the construction drawings and all work shall be done in a workmanlike manner.

d. Backfill

1. General -Backfilling of the trench around the pipe and excava- tion around appurtenances shall follow the installation as closely as possible. Backfill shall be accomplished in two stages: (1) Initial back- fill from proper trench grade to twelve (12) inches over the pipe; (2) Final backfill from twelve (12) inches over the pipe to the surface.

2. Initial Backfill – Vitrified Clay Pipe and PVC or ABS Composite Pipe. Initial backfill should be accomplished as soon as possible after the pipe has been laid. The backfill material shall be approved by the City Engineer and shall contain no particles larger than 1-1/2-inch for VCP or 3/4 inch for Composite Pipe. The material shall be sufficiently damp to permit thorough compaction on all sides of the pipe free from voids. Initial backfill shall consist of placing the backfill from proper trench grade to an elevation of twelve (12) inches over the top of pipe by the following procedure:

The first lift of material shall be uniformly placed on both sides of the pipeline for the full width of the trench and have a maximum loose depth of not more than six (6) inches as measured from the trench bottom. This material shall then be tamped under and around the pipe and joints until all voids underneath and around the pipe and joints have been filled.

After the voids beneath the pipe have been filled, the material between the trench walls and the pipe shall be compacted, with each layer firmly compacted prior to placing the subsequent material, until the materials have reached a minimum depth of the horizontal centerline of the pipe line. From the horizontal centerline of the pipe line to a depth of twelve (12) inches over the pipe lines, the backfill material shall be placed in horizontal layers not exceeding eight (8) inches in depth and properly compacted by tamping.

Flooding of the initial backfill may be permitted with prior approval of the City Engineer. Flooding of the initial backfill will be permitted when the material contains no rocks larger than one (1) inch and has a sand equivalent value of not less than 30 as determined by Test Method No.217 of the California Division of Highways.

Alternate- Initial backfill shall consist of placing saturated sand as approved by the City Engineer, from either on-site or off-site sources, from proper trench grade to a compacted elevation of twelve (12) inches above the top of the pipe. The sand shall be properly saturated before placement in the trench. This material may be placed in one lift provided adequate rodding or vibrating during placement is performed to assure filling of all voids under and around the pipe. Care should be taken to avoid floating of pipe in all cases. This method of initial backfill shall be used only when the native material in the trench permits adequate drainage and suitable in the opinion of the City Engineer. There shall be no free water standing on the surface of the initial backfill at the time final backfill is placed.

3. Initial Backfill -PVC and ABS Solid Wall Pipe. The embedment practices and procedures for PVC and ABS solid wall sewer pipe shall be in accordance with ASTM D 2321, latest revision, entitled, "Standard Recommended Practice for Underground Installation of Flexible Thermoplastic Sewer Pipe", using Class I, II or III embedment materials for depths up to ten (10) feet. Where the depth of cover is in excess of &, ten (10) feet, only Class I or II embedment materials shall be used.

The same class of embedment material shall be used for the bedding haunching and initial backfill. The bedding material shall have a minimum : thickness of four (4) inches. ~~

4. Final Backfill -The balance of backfill shall contain no particles larger than six (6) inches in its greatest dimension or such smaller dimensions as specified by the governing body having jurisdiction and shall be free from brush or any other perishable or objectionable matter that would prevent proper compaction, consolidation or that might cause sub- sequent settlement. All of the backfill placed shall be compacted to a minimum density of ninety (90) percent of its maximum density as determined in accordance with ASTM D 1557. Ninety-five percent minimum is required for backfill within 6 inches of the grading plane for base or paving.

Flooding and/or jetting of the material to accomplish compaction will not be permitted without prior authorization by the City. For trenches eight (8) feet in depth or less, the final backfill may be placed in compacted lifts of twenty-four (24) inches, or one-half (1/2) of the trench depth, whichever is the greater depth. For trenches greater than eight (8) feet in depth, the material shall be placed in maximum compacted lifts of four (4) feet. The depth of fill lifts in trenches on slopes may be reduced by the City to facilitate compaction.

Any deficiency in the quantity of material for backfilling the trenches or for filling depressions caused by settlement shall be supplied by the Contractor. Surplus soil shall be crowned over the trenches, spread or hauled away as directed by the City Engineer.

Backfill within traveled streets or highways, existing or proposed, shall meet the standards and approval of the agency or proper authority having jurisdiction over same.

Where flooding and/or jetting has been approved by the City Engineer, backfill shall be thoroughly consolidated by use of water jets. The Contractor shall use jets of at least one and one-quarter (1-1/4) inches in diameter and of sufficient length to extend to within one foot of the top of the pipe.

Where water is not readily available in sufficient quantity and pressure, the backfill may be flooded by the following method. The water shall be allowed to flow slowly into the trench from the upper end, and shall be worked down to the bottom of the trench by "poling". Care shall be taken to insure that water does not flow through the trench before it has penetrated down to the pipe line.

e. Pavement Removal

Existing pavement to be removed shall be saw cut to neat straight lines. Damaged pavement adjacent to the trench shall also be saw cut and removed, in rectangular sections, beyond the limits of damage. If approved by the City Engineer, other cutting methods may be used where existing pavement conditions warrant. The pavement so removed shall be hauled away as directed by the City. All pavement removal and replacement shall con- form to the standards and specifications of the governing body having jurisdiction, and shall meet with their approval. The Contractor shall be responsible for replacing all necessary pavement as specified in Section 4, PAVEMENT REPLACEMENT.

3.02 Pipe Laying

All foreign matter and dirt shall be removed from the interior of the pipe prior to its installation. Before lowering, the pipe shall be inspected for defects. Any defective, damaged or unsound pipe shall be rejected. The entire joint including coupling, ends of the pipe and the rubber gasket or ring shall be thoroughly cleaned at the time the joint is made. The entire procedure and method of installation of the pipe and making joints shall be done in a workmanlike manner and shall be in strict accordance with the pipe manufacturer's direction and recommendations.

The bottom of the trench shall be shaped to give substantially uniform support to each pipe. Pipe laying shall proceed upgrade with the spigot ends of bell-and-spigot pipe pointing in the direction of the flow.

All pipe shall be laid according to the size, class, location and grade shown on the Plans. The faces of all spigot ends and all shoulders in the hubs or sockets must be true and brought into firm contact. Rubber ring locations shall be checked with suitable gauges to insure that they are located in the proper position relative to the pipe ends.

Each pipe shall be laid true to line and grade in such a manner as to form a close concentric joint with the adjoining pipe and to prevent sudden offsets of the flow line. As the work progresses, the interior of the sewer shall be cleared of all dirt and superfluous materials of every description.

Where cleaning after laying is difficult because of small pipe size, a suitable swab or drag shall be kept in the pipe and pulled forward past each joint immediately after the jointing has been completed. If the maxi- mum width of the trench at the top of the pipe, specified in EXCAVATION, TRENCHING AND BACKFILLING is exceeded for any other reason than by order of the City Engineer, the Contractor shall install at his own expense such concrete, cradling, pipe encasement, or other bedding as may be required by the City Engineer to support the added load of the backfill. Trenches shall be kept free from water until the pipe jointing has been completed, and the pipe shall not be laid when the condition of the trench or the weather is unsuitable for such work. The Contractor shall take all necessary care and precautions to prevent the pipe from floating due to water entering the trench from any source. The Contractor shall be responsible for damage caused by floating pipe, and shall, at his sole expense, restore and replace the pipe to its proper conditions, alignment and grade.

At times when work is not in progress, unfinished ends of pipe and fittings shall be securely closed to the satisfaction of the City Engineer so that no trench water, earth, or other substance will enter the pipe or fittings.

Where pipe is laid on a curve or at horizontal or vertical angles in the trench, the maximum deflection at the joint shall not exceed sixty (60) percent of the limitations specified by the pipe manufacturer and each joint shall be adequately blocked to take the thrust until properly back- filled.

Whenever pipe is required to be cut, it shall be done in a neat and workmanlike manner and the cut shall be made at a right angle to the longitudinal axis of the pipe. All burrs shall be removed prior to the assembly of the pipe.
Connections to manholes or other rigid structures shall be accomplished by a flexible joint at or within twelve inches of the structure.

3-03 PIPE JOINTING

A. Vitrified Clay Pipe

Joints in the bell-and-spigot pipe shall be made by lubricating the resilient material on both the bell-and-spigot ends with soap solution approved by the manufacturer. Position the spigot inside the bell of the next length and properly align the two sections in the trench. Push the

joint home by hand or by means of a bar lever, with wooden blocking to pro- tect the bell end from damage, until the joint is obtained.

Joints in plain-end pipe shall consist of three parts; a circular rubber sleeve, stainless steel compression bands with a bolt and nut mechanism for tensioning bands, and a shear ring to insure proper alignment of the pipe joints. The bolt and nut mechanism to tension bands shall be tightened by a torque wrench, furnished by and preset to the manufacturer's specifications. Prior to tensioning, a lubricant approved by the manufacturer shall be applied to the rubber under the area of the bands.

b. Solvent Welded Plastic Sewer Pipe

Solvent welded plastic pipe and socket type fittings and couplings shall be joined as follows:

1. Cut the pipe square using a hack saw or band saw with mitre box or power saw with relatively slow feed or tube cutter with special wheel for cutting plastics.

2. Remove burrs with sandpaper or knife.

3. After pipe and fittings have been exposed to the same temperature for a reasonable length of time, they should be tested for tight or loose fit before cement is applied. The ideal fit of pipe and fittings before cement is applied is for the pipe to enter the socket easily for a distance of 1/4 to 3/4 of the socket depth.

4. Clean the pipe and fitting socket. Wipe away dust and moisture. Remove grease and oil with clean gasoline.

5. Let the gasoline evaporate before applying the cement.

6. Brush cement uniformly on the inside of the socket by means of a non-synthetic paint brush. Avoid puddling in the socket which would form a bead on the inside of the fitting when the pipe is inserted.

7. Brush cement generously on the outside of the pipe to the depths of the fitting socket. On composite pipe, seal the ends with a generous coating of solvent cement.

8. After cement is applied, insert the pipe to the bottom of the socket using a slight twisting motion, and hold the pipe and fitting in place for a few seconds until the cement sets. This will keep the pipe from backing out slightly when pressure is released.

9. The joint may be handled immediately with care. Avoid rough handling for one hour. The joint may be tested at 1/3 of the rated working pressure after four hour. Avoid full-rated working pressure for 24 hours.

10. Keep the can containing the cement covered between operations to avoid moisture absorption.

c. Polyvinyl Chloride (PVC) Pipe

Joints in PVC elastomeric joints shall be made by making certain the bell and rubber rings are clean with no foreign material that could interfere with the proper assembly of the joint is present. Wipe the spigot end of the pipe with a clean, dry cloth around the entire circumference from the end to one inch beyond the reference mark. Lubricate the spigot end of the pipe, using only lubricant recommended or supplied by the pipe manufacturer. The lubricant shall be applied in a consistency and manner in accordance with the pipe manufacturers recommendations. The spigot end of the pipe is then inserted into the bell so that it is in contact with the rubber ring, keeping the pipe lengths in proper alignment. Brace the bell while the spigot end is pushed in under the rubber ring, so that previously completed joints will not be closed up. Push the spigot end in until the reference mark on the spigot end is flush with the end of the bell. This pipe shall be assembled by hand, and/or bar and block and shall not be stabbed.

d. Ductile Iron Pipe

1. Bell-and-spigot -Before jointing, the outside of the spigot and the inside of the bell shall be free from lumps, blisters, oil, grease, and excess coating material, and shall be wire brushed and wiped clean and dry. Join as described above for PVC pipe.

2. Mechanical -Before jointing, the socket and plain end of the pipe shall be brushed and wiped clean of dirt, oil, grease and scale. The socket and end shall be washed with soapy water, then after the gland and gasket have been slipped on, the gasket shall be painted with soapy water. The gasket shall then be pushed into position and seated with the fingers after which the gland shall be positioned and all bolts tightened by hand before using the wrench.

3-04 SEPARATE WYES

Commercially manufactured wyes shall be installed where indicated on the plans and/or at such other locations required by the City Engineer. Where conditions are such that the house connection cannot be adequately supported on undisturbed earth or tamped backfill, the house connection pipe shall be encased in concrete and supported on a concrete cradle as directed by the City Engineer. All wye branches not joined to house connections shall be installed with a suitable stopper of the size of the wye branch. The wye branches, unless otherwise specified, shall be inclined upward at an angle not greater than 45 degrees from a horizontal line. No wye branch shall be placed closer than five (5) feet to the centerline of any structure. The use of double wyes will not be permitted except as specified or required for chimneys.

3-05 CHIMNEY PIPES

Chimney Pipe shall be constructed as shown on Plate VIII and at locations designated on the plans. Chimney pipes shall be installed where the depth of the sewer main is twelve (12) feet or more, in depth or as designated by the City.

3-06 HOUSE CONNECTIONS

The term "house connection" as used in these specifications or on the plans is used to designate branch or lateral sewers, laid from a main sewer to points at the property lines, or other locations as shown on the plans, from which sewer service can be obtained by proper extension.

The house connection shall be constructed in accordance with details shown in Plate IX on an unyielding foundation, with joints closely and accurately fitted, true to line, and on a straight grade from the bend joining the main sewer to their upper ends, unless otherwise indicated on the plans. House connections shall not be laid on a slope greater than 45 degrees from a horizontal line unless approved by the City Engineer. Wyes for house connections shall be installed as specified in Sub-Section 3-04. The house connection sewer line shall be joined to the wye branch by eighth bends. All eighth bends are apart of the house connection sewer lines. Where a house connection sewer line is to be connected with a chimney, all bends leading away from the wye branch are a part of said house connection sewer line. All house connections shall be installed with a suitable stopper of the size of the connection.

3-07 MANHOLES

a. General

Manhole invert channels shall be smooth and semicircular in shape, conforming to the inside of the adjacent sewer section. Changes in direction of flow shall be made with a smooth curve of as large a radius as the size of the manhole will permit. Changes in size and grade of the channels shall be made gradually and evenly. The invert channels may be formed directly in the concrete of the manhole base, may be half tile laid in concrete, or may be constructed by laying full section sewer pipe through the manhole and breaking out the top half after the surrounding concrete has hardened. The floor of the manhole outside the channels shall be smooth and shall slope toward the channels not less than one inch per foot nor more than two (2) inches per foot. Edge of channel shall be rounded and smooth.

Manhole frames and covers shall be installed in accordance with Plate V. Top of manhole frames and covers shall be installed six (6) inches below finish grade in new tract developments. After paving, manhole frames and covers shall be adjusted to top of pavement. Manhole frames and covers in existing street pavement shall be constructed to top of pavement.

b. Precast Manholes

Precast manholes shall be installed and assembled in accordance with details shown on Plate No. II and in accordance with the manufacturers' specifications. An essentric cone shall be used with straight wall downstream except at permanent sewer dead ends where the straight wall shall be upstream. All manholes shall have three (3) inch and six (6) inch grade rings for a minimum height of twelve (12) inches and a maximum height of eighteen (18} inches. below the manhole frame.

c. Drop Manholes -Plate IV

d. Remodeling Existing Manholes

Pipe connections to existing manholes or existing stubs shall be made in such a manner that the finished work will conform as nearly as practicable to the essential applicable requirements specified for new manholes, including all necessary brick work, concrete work, cutting, and reshaping of inverts to provide proper channels for flow.

3-08 DEAD ENDS

Dead Ends may be constructed as shown on Plate VI or VI-A at loca- tions approved by the City Engineer. The top of Dead End frames and covers shall be installed six (6) inches below finish grade in new tract developments. Dead End frames and covers shall be installed in accordance with Plate No. VII. After paving, the top of Dead End frames and covers in existing pavement shall be constructed to top of pavement.

3-09 BORED CROSSINGS

a. General

The work covered by this paragraph of the specifications includes all pipe, pipe fittings, casing, special appurtenances, and materials between the stations indicated as bored crossings on the drawings.

b. Installation

Crossings shall be dry bored with an earth auger to the line and grade shown on the plans. The maximum allowable variation in line or grade will be two-tenths (0.20) of afoot in the distance bored. Should voids be created outside the casing pipe, the voids shall be filled as directed by the City Engineer. The approved sewer pipe shall be strapped to redwood skids with stainless steel bands and shall be threaded through the casing. After the pipe is in the casing, the space between the pipe and the casing for the full length of the bore shall be filled with blown- in sand.

3-10 CONCRETE WORK

Concrete as specified herein before, shall be used for manhole bases, pipe bedding encasements and for other support and backfill as the City Engineer may direct. In general, forms will not be required, pro- vided that concrete may be successfully placed to the minimum dimensions as shown on the drawings using side walls of excavations for support. If side walls of excavations are not suitably stable in the opinion of the City Engineer, the Contractor shall furnish and use forms for concrete placement.

3-11 TESTS

A. General

The completed sewers, including laterals and manholes, shall be water-tight, clean, of uniform grade, and free from obstructions or off- sets which could interfere with the functional design of the system. Except as indicated below, the Contractor shall furnish all materials, equipment and services required for the tests. Compaction tests should be completed to confirm satisfactory densification of backfill prior to tests for displacement, leakage or deflection of sewer pipe. Any backfill re-compaction effort or sewer pipe repair done after testing will require retests for compaction, displacement, leakage and deflection. Tests shall be made in the presence of the City's authorized representative and shall be performed prior to the sewers being placed in service. All sewers will require testing unless otherwise directed by the City.

b. Test for Displacement of Sewers

Sewer mains will be checked by the City Engineer to determine whether any displacement of the pipe has occurred after the trench has been completely backfilled and compacted as specified. The test will be as follows: Alight will be flashed between manholes, or, if the manholes have not as yet been constructed, between the locations of the manholes, by means of a flashlight. If the illuminated interior of the pipeline shows poor alignment, displaced pipe, the defects designated by the City shall be remedied by the Contractor at his expense to the satisfaction of the City.

c. Jest for Leakage

1. General

Watertightness of sewers and manholes shall be determined by one of three methods:

(a) Infiltration testing
(b) Ex filtration testing
(c) Low pressure air testing

2. Infiltration Test

Sewer lines installed in areas where the sewer is subject to high ground water infiltration shall be tested using direct flow measurement in each reach of sewer. The total infiltration shall not exceed 200 gallons per day per inch diameter per mile of pipe as shown in the table below.

ALLOWABLE LIMITS OF INFILTRATION OR EX FILTRATION

Sewer Diameter (in.)	Gals/Hr per 100 ft.	Sewer Diameter (in.)	Gals/Hr per 100 ft.
4	0.63	15	2.36
6	0.95	18	2.83
8	1.26	21	3.31
10	1.57	24	3.78
12	1.89		

3. Exfiltration Test

Each section of sanitary sewer shall be tested from manhole to manhole or dead end. The tests shall be made by closing the lower end of the sewer to be tested and the inlet of the upper structure with plugs and filling the pipe and structure with water to a point four (4) feet above the invert of the open sewer in the upper manhole or dead end, where the difference in elevation of inverts of lower and upper structures is more than 20 feet, an air test shall be used. Prior to actual test, the sewer and manhole to be tested shall be allowed to saturate at the test head for a period to be determined by the City Engineer. The allowable leakage shall be 200 gallons per day per inch of inside diameter per mile of sewer. If the leakage disclosed by the test is greater than that allowed by the formula, the sewer main shall be repaired and if necessary, relaid until the joints shall hold satisfactorily under this test. All sewer mains will require testing unless otherwise directed by the City Engineer. The Contractor shall, at his own expense, furnish all materials and labor for making said tests, and the tests shall be made only in the presence of the City Engineer or his authorized representative.

4. Hydrostatic Test -Manholes

Where required by the City Engineer, manholes shall be water tested separately. The inlet and outlet of the manhole shall be plugged and the cylindrical section of the manhole filled with water. The maximum allowable leakage rate per foot of depth tested shall be one (1) gallon per hour. The test shall run a minimum of thirty (30) minutes.

5. Air Test

Length of line tested at one time shall be limited to the length between adjacent structures.

Pressurize the test section to 4.0 psi and hold at 4.0 psi for not less than two minutes. Add air if necessary, to keep the pressure at 4.0 psi.

Disconnect air supply. When pressure decreases to 3.5 psi, start stopwatch. Determine the time in seconds that is required for the inter- nal pressure to reach 2.5 psi. This time interval shall be greater than time given in the following table. The section of pipe shall not have passed if the time is less than shown.

Minimum Air Test Time
Sewer Minimum Time (min. & sec. for 1.0 PSIG Pressure)
Drop for Length (Feet) of Sewer Shown

Sewer Diameter (in.)	100	150	200	250	300	350	400	450
4	0:18	0:27	0:36	0:45	0:53	1:02	1:11	1:20
6	0:40	1:00	1:20	1:40	2:00	2:20	2:40	3:00
8	1:11	1:47	2:22	2:58	3:34	4:09	4:44	5:20
10	1:51	2:47	3:42	4:38	4:43	5:11	5:56	6:40
12	2:40	4:00	5:20	5:40	5:40	6:14	7:07	8:00
15	4:10	6:15	7:05	7:05	7:05	7:18	8:20	9:23
18	6:00	8:30	8:30	8:30	8:30	8:30	9:37	10:49
21	8:11	9:55	9:55	9:55	9:55	10:24	11:54	13:23
24	10:41	11:20	11:20	11:20	11:20	12:28	14:14	16:0U

When the prevailing groundwater is above the sewer being tested, air pressure shall be increased 0.43 psi for each foot the water table is above the flow line of the sewer.

If the time for the pressure to drop 1.0 psi is not more than 125 percent of the time given in the table, the line shall immediately be repressurized to 4.0 psi and the test repeated.

If the test is not passed, the leak shall be found and repaired to the satisfaction of the City Engineer.

House sewers shall be considered part of the main sewer to which they are connected and no adjustment of test time shall be allowed to compensate, i.e., the length of 4 and 6-inch house sewers or laterals which are tested as part of the main sewer shall be ignored for determining minimum time.

The pressure gauge used shall be supplied by the Contractor; shall have minimum divisions of 0.10 psi, and shall have an accuracy of 0.04 psi. Accuracy and calibration of the gauge shall be certified by a reliable testing firm at six-month intervals, or when requested by the City Engineer.

d. Mandrel Test of PVC and ABS Pipe

Following the placement and densification of backfill and prior to ~ the placing of permanent pavement, all main line PVC and ABS pipe shall be cleaned and then mandrelled. A rigid mandrel, with a circular cross sec- tion and a minimum of nine longitudinal bars, having a minimum length of the circular portion equal to the nominal diameter of the pipe, shall be pulled through the pipe by hand. If the mandrel sticks in the pipe at any point, the pipe shall be replaced and retested. The mandrel diameter shall be at least 95 percent of the specified average inside pipe diameter for PVC or ABS solid wall pipe and 97 percent for PVC and ABS composite pipe.

e. Compaction Tests

Compaction tests of the trench backfill are required approximately every 300 feet, or more often if tests indicate the need, along the alignment of the main pipeline, and, in addition, of approximately 20 percent of all laterals within the street right-of-way. The tests shall be made at varying depths. Final test results shall be submitted in the form of a test report by an approved soils testing laboratory. Any additional requirements of governing bodies having .jurisdiction must be met. If the work is done under a permit, the Contractor shall obtain written confirmation that the work is acceptable to the governing body having jurisdiction.

SECTION 4

PAVEMENT REPLACEMENT

4-01 GENERAL

The Contractor shall furnish all labor, materials, tools, and equipment necessary and shall construct all temporary and permanent pavement base and surface courses on paved areas affected or damaged by his operations, whether inside or outside the normal trench limits.

All pavement thickness specified herein shall be the thickness required after compaction.

4-02 CONSTRUCTION METHODS

Unless otherwise specified, asphalt paving material shall be hot-mix asphalt. concrete conforming to Type B, AR4000 3/8-inch maximum as specified in Standard Specifications, State of California, Department of Transportation.

Prior to placing pavement, all backfill shall have been properly compacted as required in the EXCAVATION, TRENCHING AND BACKFILL section to eliminate settling of backfill. No pavement shall be placed over poorly compacted backfill.

Backfill and gravel base course shall have been compacted, brought to the proper elevation, and dressed so that new pavement construction shall be at the required grade. The Contractor shall maintain the surface of all excavated and disturbed areas until the pavement is placed. If there is a time lapse of more than 24 hours between completion of preparation of subgrade or placing of gravel base course and placing of paving, or if subgrade or gravel base course has been eroded or disturbed by traffic, it shall be restored to an approved conditions before placing paving.

The Contractor shall remove and acceptably dispose of all surplus and unsuitable material.

Unless indicated otherwise, all permanent pavement shall be installed in two courses. Asphalt base courses shall be carefully spread and raked to a uniform surface and thoroughly rolled before application of the upper course.

When installing permanent paving, the edge of existing pavement shall be cut back 12 inches, or more as required, from the trench excavation wall or damaged area to sound, undamaged material, straightened with vertical face, cleaned and painted with cutback asphalt to ensure a satisfactory bond between old and new pavement.

Where feathering and overlapping of equivalent courses are not permitted in permanent pavingt the existing surface courses shall be stripped from the bituminous base course for at least a 6-inch width and trimmed square and straight so that new surface shall be placed on undisturbed base courset unless indicated otherwise.

The initial rolling for all courses shall be by steel-wheel power rollers weighing not less than 240 pounds per inch of tread and equipped with a 'device for watering the roller. No oil shall be allowed on the rollers. Suitable self-propelled pneumatic-tired rollers subject to the approval of the Engineer may be permitted for subsequent rolling. Places not accessible to a roller shall be thoroughly compacted with tampers weighing not less than 25 pounds and with a tamping face of not more than 50 square inches. Vibratory compactors may be also used as approved for gravel base course. Rolling shall be done to produce the required consolidation compaction, and finish. When compacting gravel base course to the required density, there shall be no visible creeping or settlement under the final passes of the compacting equipment.

Pavement shall be replaced so that the whole roadway shall have a true and uniform cross section and the pavement shall conform to the proper grade and cross section with a smooth transition to existing pavement.

4-03 BASE MATERIAL

Base material shall be replaced with compacted Class II aggregate base to the same thickness as that removed but not less than 6-inches thick. In lieu of base material additional asphalt concrete (hot mix) may be placed at the ratio l-inch additional per 2-inch aggregate base. Additional asphalt concrete (hot plant mix) should be placed in 3-inch lifts and compacted prior to placing subsequent lifts.

4-04 PAVEMENT REPAIR

Immediately upon completion of backfill, the Contractor shall cap the compacted trench by one of the following methods:

a. A minimum of 2-inch temporary "cold mix" asphalt shall be placed to provide a smooth riding surface. This pavement shall be removed and the backfill regarded at the time of permanent pavement repairs.

b. After compaction of backfill and taking of required tests, the trench shall be graded to provide the proper thickness of asphalt (and base, if required). After tacking the existing pavement (and/or placement of base) asphalt concrete (Type B AR4000 3/8-inch maximum, hot mixed) shall be placed and compacted to finish grade or place hot mixed asphalt to within l-inch of finished surface. Finished surfacing to be placed in the future. This pavement may remain in place at the time of permanent final

paving repair. This work shall be accomplished immediately after backfill, but in no case later than the fifth day following excavation. All trenches shall be backfilled and pavement in place on Saturdays, Sundays, and holidays. Temporary or base course paving shall be maintained in a safe and smooth condition by the ~ Contractor until final pavement is in place.

In the event of inclement weather or forecast of the same, the Contractor shall immediately backfill all open trenches and place pavement.

4-05 FINISH PAVING

Where asphalt paving has been removed, permanent, finish paving shall be replaced with a minimum based-in 3-inch thickness of Type B AR4000 3/8-inch maximum hot mixed asphalt concrete within 30 days after completion of back- fill. (This time may be extended due to inclement weather or seasonal weather unsuitable for paving operations.) Finish paving shall be accomplished by a licensed contractor engaged in the business of pavement repair.

If temporary (cold mix) asphalt has been placed, asphalt (cold mix) shall be removed and backfill graded for finish thickness. All edges shall be tacked and hot mixed asphalt shall be placed in accordance with the following specifications.

If hot mixed asphalt has been placed to within 1-inch of finish grade, finish paving shall be accomplished in accordance with the following specifications:

a. Finish Paving of Trenches Less Than 300 Feet and Lateral Pavement Excavations. Damaged or cracked pavement adjacent to the trench shall be sawcut and removed in rectangular shapes. Existing pavement shall be cleaned.

"Tack coat" shall be uniformly applied on all edges and "squared" up beyond removed asphalt, a minimum of 1 foot. Asphalt concrete shall be placed to provide a smooth riding surface. Finished surface on lateral trench repairs shall not vary more than .03 feet above or .01 feet below existing pavement grade and on longitudinal trench repairs, the grade shall not vary more than .02 feet above nor more than .01 feet below existing pavement.

b. Finish Paving of Trenches in Pavement Over 300 Feet in Length or More Than Six Laterals, Trenches an/or Pot Holes in a 300 Foot Section of Roadway. Pavement shall be overlaid utilizing a self propelled vibrating screen paving machine and hot-mix asphalt concrete (type b, AR4000, 3/8 in. maximum). Area of overlay shall be uniformly tack coated. Asphalt concrete overlay shall be placed parallel to the centerline and shall cove the entire travel lane width but not less that 12 feet wide. Where pipeline trench crosses centerline, asphalt concrete overlay shall stop 5 feet beyond and start 5 feet preceding point where extreme outer edges of pipeline trench crosses centerline. Asphalt concrete overlay at minimum practical thickness (l-inch minimum) shall be placed to provide a dense and smooth riding surface.

4-06 OPEN GRADED PAVING

Where open graded paving has been removed, permanent open graded asphalt concrete shall be replaced as specified in Section 39, Standard Specifications, State of California, Department of Transportation, current edition. Work of replacement of open graded asphalt concrete shall be accomplished by a licensed contractor engaged in the business of pavement repair.

4-07 BITUMINOUS SEAL COAT

A seal coat consisting of an application binder and screenings shall be applied on all patch areas where such seal coats existed prior to construction. The type of seal coat to be applied shall be designated as medium. Seal coats shall be as specified in Section 37, Standard Specifications, State of California, Department of Transportation, current edition. Work of pavement repair shall be accomplished by a licensed contractor engaged in the business of pavement repair.

4-08 MANHOLE PAVING

Where manholes are constructed in graded shoulders adjacent to existing pavement, asphalt concrete and base shall be placed to a minimum of 2 feet around the manhole and out 45 degrees to the edge of existing pavement.

4-09 COUNTY ROADS AND STATE HIGHWAYS

The specifications, policies and procedures of San Bernardino Count} Transportation Department and California Department of Transportation - CALTRANS shall supersede all other provisions of this Section within their respective jurisdictions.

SECTION 5

PUBLIC CONVENIENCE AND SAFETY

5-01 PUBLIC CONVENIENCE

The Contractor shall conduct his operations so as to offer the least possible obstruction and inconvenience to the public and he shall have under construction no greater length or amount of work than he can prose- cute properly with due regard to the rights of the public.

Unless otherwise provided in the Special Provisions, all public traffic shall be permitted to pass through the work with as little inconvenience and delay as possible. Where possible, such traffic shall be routed on new or existing paved surfaces.

Spillage resulting from hauling operations along or across any public traveled way shall be removed immediately by the Contractor at his expense.
Construction operations shall be conducted in such a manner as to cause as little inconvenience as possible to abutting property owners.

Convenient access to driveways, houses, and buildings along the line of the work shall be maintained and temporary approaches to crossings or intersecting highways shall be provided and kept in good conditions. When the abutting property owner's access across the right-of-way line is to be eliminated or to be replaced by other access, the property owner's access shall not be closed until the replacement access facilities are usable.

Water or dust palliative shall be applied as required for the alleviation or presentation of dust nuisance.

In order to expedite the passage of public traffic through or around the work, the Contractor shall install signs, lights, flares, barricades, and other facilities for the sole convenience and direction of public traffic. Also, the Contractor shall furnish competent flagmen whose sole duties shall consist of directing the movement of public traffic through or around the work.

5-02 PUBLIC SAFETY

Whenever work is being performed adjacent to a lane carrying traffic, the edge of lane or edge of pavement shall be delineated by placing temporary portable delineators adjacent, thereto.

Whenever the Contractor's operations create a condition hazardous to traffic or to the public, he shall, at his expense and without costs to the City, furnish, erect, and maintain such fences, barricades, lights, signs, and other devices, and take such other protective measures as are necessary

to prevent accidents, damage, or injury to the public. The Contractor shall also furnish such flagmen as are necessary to give adequate warning to traffic or to the public of any dangerous conditions to be encountered. Signs, lights, flags, and other warning and safety devices shall conform to the requirements set forth in the current "MANUAL OF TRAFFIC CONTROL - Warning signs, Lights, and Devices for the Use in Performance of Work Upon Highways", issued by the State of California Department of Transportation. When construction results in only one paved traffic lane being open to traffic, a minimum of two (2) flagmen, with appropriate signs and protective equipment shall be required to direct traffic through the construction zone. In certain cases, pilot cars and/or radio communication between flagmen may be required.

Should the Contractor appear to be neglectful in furnishing, installing, and maintaining warning devices and taking protective measures as above provided, the City may direct attention to the existence of a hazard and the necessary warning devices shall be furnished, installed, and maintained and protective measures shall be taken by the Contractor at his expense. Should the City point out the inadequacy of warning devices and protective measures, such action on the part of the City shall not relieve the Contractor of his responsibility for furnishing and maintaining any of the protective facilities hereinbefore specified.

Roadside trees, shrubs, and other plants are not to be removed, unless removal is noted on the plans. Should tree roots be severed, thereby weakening their structure, the City may require trees to be removed, topped or trimmed for safety purposes. Pole lines, fences, signs, markers, monuments, buildings, structures, conduits, pipelines, sewer and water lines, all highway facilities, and any other improvement or facilities within or adjacent to the highway, under or above the ground, shall be protected from injury or damage. If such objects are injured or damaged by reason of Contractor's operations, they shall be replaced or restored at Contractor's expense. The facilities shall be replaced or restored to a condition as good as when the Contractor entered upon the work. The City may make or cause to be made such temporary repairs as necessary to restore to service damaged highway facility. The cost of such repairs shall be borne by the Contractor.

Where necessary for Public Safety and Convenience, Contractor shall, at his expense, provide and maintain suitable drainage of the roadway and erect such temporary structures as are necessary. The suspension of the work from any cause whatever, shall not relieve the Contractor of his responsibility to provide for the safety and convenience of public traffic and local residents.

SECTION 6

GUARANTEE

The applicant shall by virtue of a bond, satisfactory to the City, completed work against repairs caused by defective workmanship or materials furnished and installed for a period of two years from the date of acceptance by the City of the Dedication of Sewers.

The applicant shall furnish to the City a satisfactory bond in the percent of the total cost, upon a form furnished by the City he fulfillment of such obligation.

CITY OF ADELANTO

LEGEND

	SEWER PROPOSED
	SEWER EXISTING
	ADELANTO CITY LIMITS
	ENCASEMENT
	DEAD END
	HOUSE CONNECTION SEWER
	WYE BRANCH
	CHIMNEY PIPE PROPOSED
	CHIMNEY PIPE EXISTING
	PORTLAND CEMENT CONCRETE IN SECTION
	PORTLAND CEMENT CONCRETE IN PLAN
3"G	GAS LINE EXISTING
3"W	WATER LINE EXISTING
3MTD	ELECTRICAL AND TELEPHONE CONDUIT EXISTING
	TRAFFIC SIGNAL EXISTING
	WELL, WATER
M.H.	MANHOLE
J.M.H.	JUNCTION MANHOLE
D.M.H.	DROP MANHOLE
H.C.	HOUSE CONNECTION SEWER
D.E.	DEAD END
V.C.P.	VITRIFIED CLAY PIPE
D.I.P.	DUCTILE IRON PIPE
P.V.C.	POLYVINYL CHLORIDE PIPE
A.B.S.	ACRYLONITRILE BUTADIENE STYRENE
	POWER POLE AND GUY LINE

PLATE 1

CITY OF ADELANTO

PRECAST REINFORCED CONCRETE MANHOLE

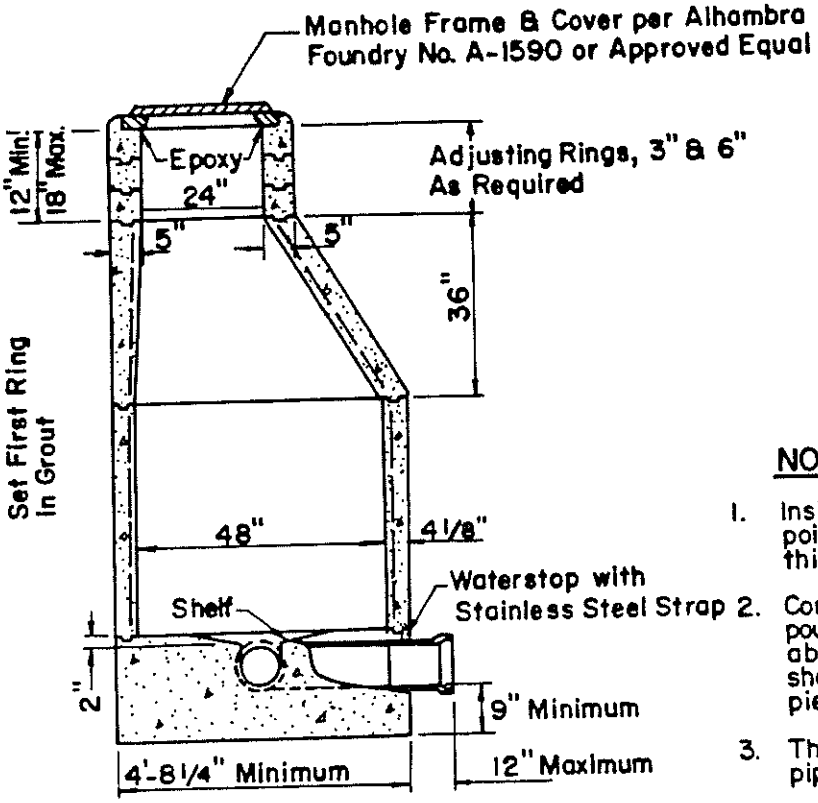

SECTIONAL ELEVATION

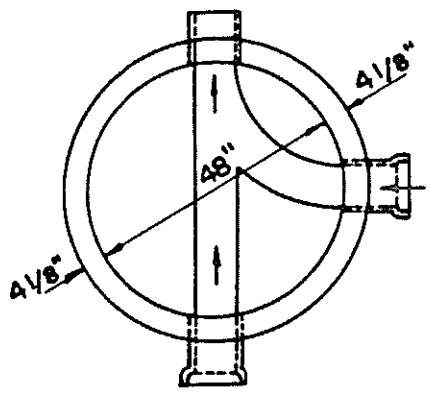

PLAN OF BASE

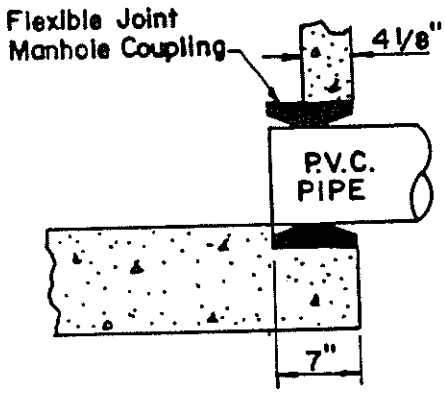

P.V.C. MANHOLE CONNECTION

NOTES

1. Inside joints shall be neatly struck and pointed and shall not exceed 3/8" in thickness.
2. Concrete base and stub walls shall be poured in one operation to a point 2" above the top of inlet pipes. All pipes shall be rigidly supported by temporary piers during this operation.
3. The depth of channel shall equal the pipe diameter for all sizes of pipe.
4. Precast reinforced concrete manholes shall be manufactured to meet the requirements of ASTM C 478 specifications (latest revision).
5. Reinforcement: Cone and Riser Minimum As=0.12 sq. in. per foot.
6. Concrete: Minimum compressive strength 4,000 p.s.i. at 28 days.
7. All inlet and outlet connections shall have a maximum length of 12 inches as measured from the outside of the manhole unless a flexible joint is provided in the manhole base.

CITY OF ADELANTO

DROP MANHOLE

NOTE: See Plate II for Standard Construction of Manhole

Standard Drop Manhole tee and 1/4 bend, same size as inlet sewer main.

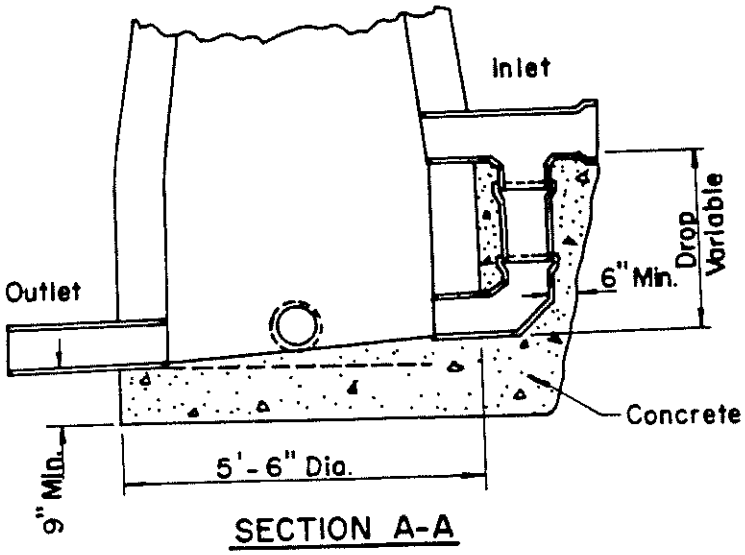

SECTION A-A

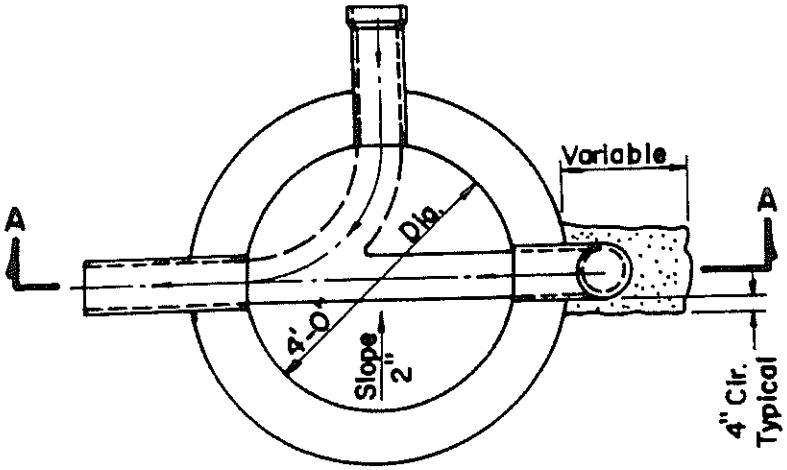

PLAN

PLATE IV

CITY OF ADELANTO

MANHOLE FRAME & COVER

NOTES

1. Ring and cover to be machined for a snug fit.
2. Approximate weight, ring and cover = 385 lbs. minimum.
3. C.I. to have 30,000 p.s.i. tensile strength.

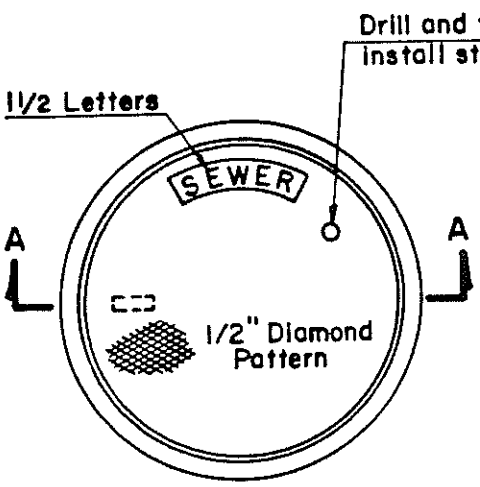

TOP PLAN OF COVER

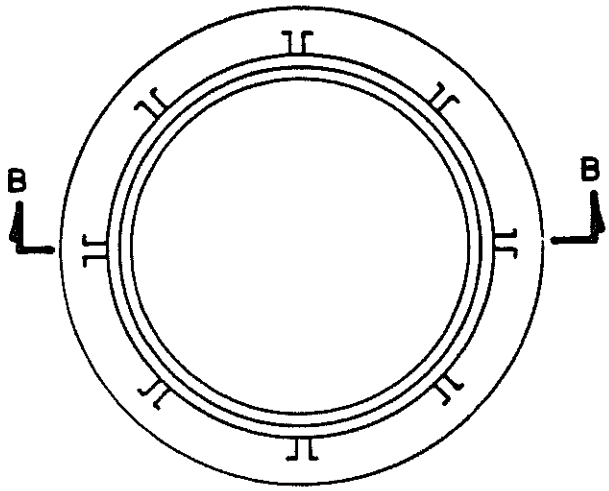

PLAN OF FRAME

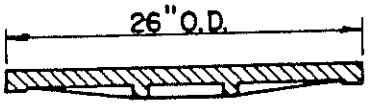

SECTION A-A

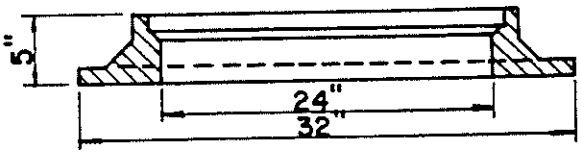

SECTION B-B

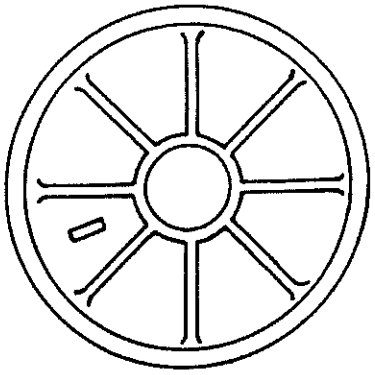

BOTTOM PLAN OF COVER

PLATE V

CITY OF ADELANTO

DEAD END - V.C.P. PIPE

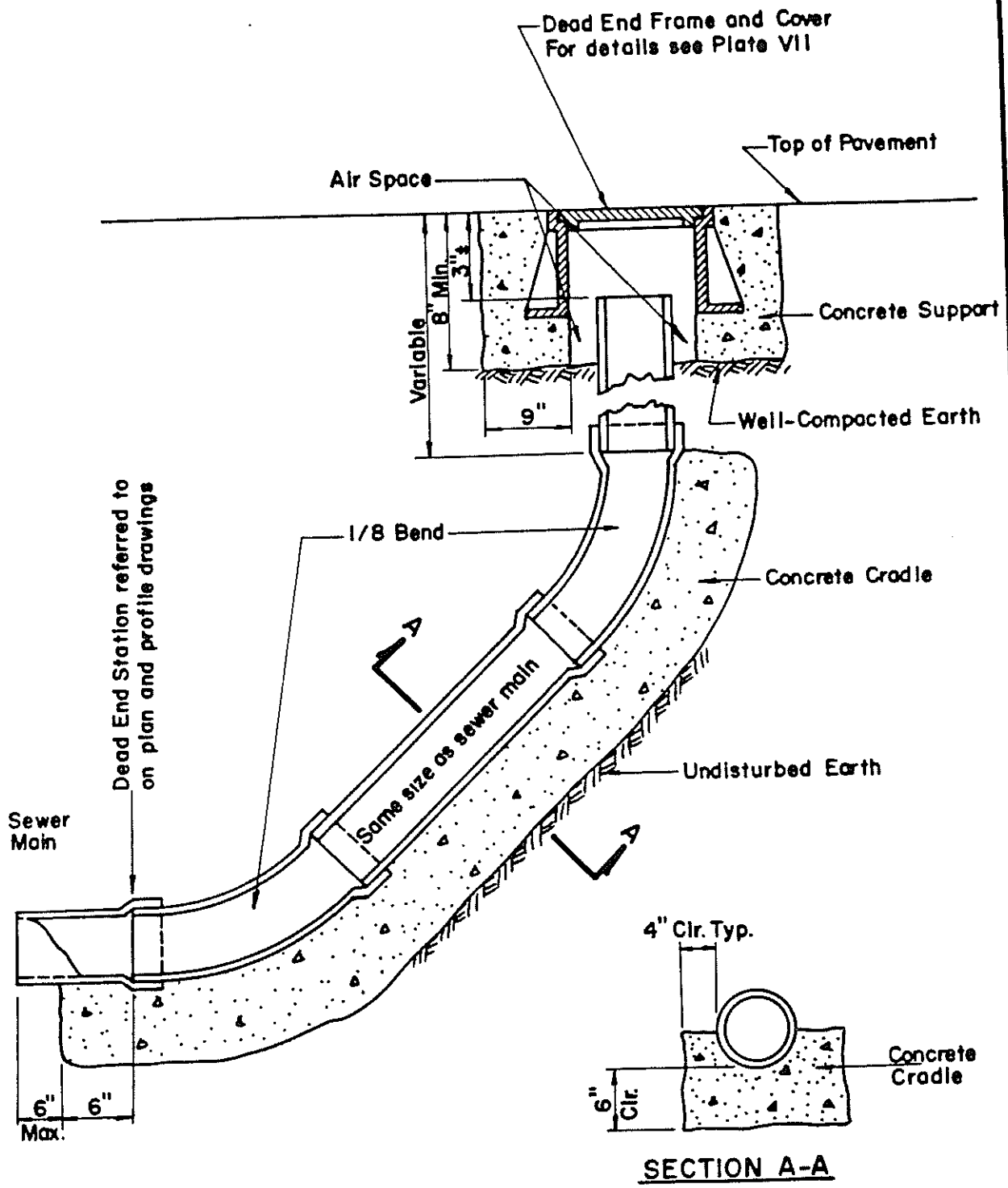

NOTE
The concrete cradle shown above may be required by the City Engineer when a firm and unyielding foundation is not obtainable.

PLATE VI

CITY OF ADELANTO

DEAD END-P.V.C. & A.B.S. PIPE

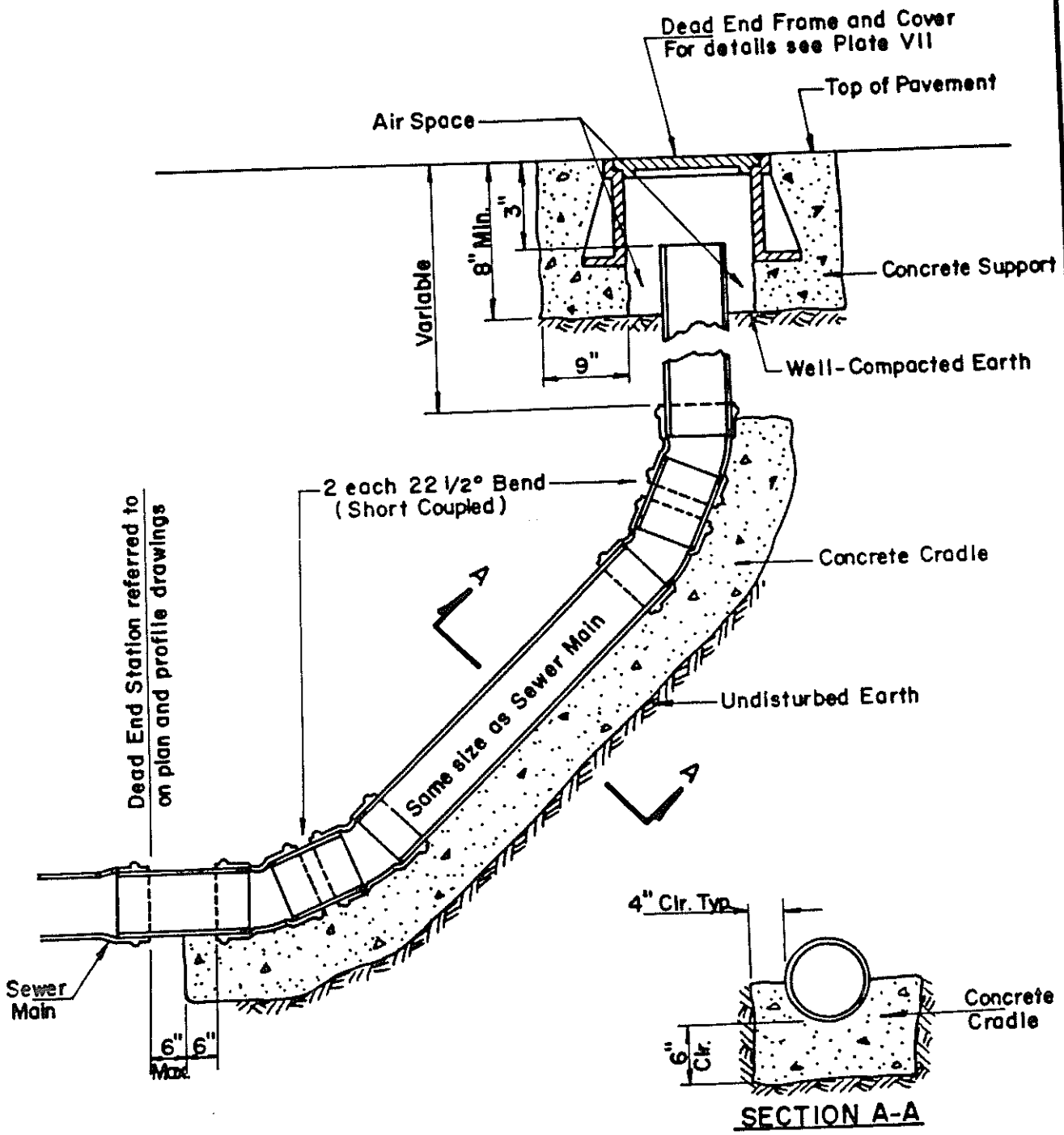

NOTE

The concrete cradle shown above may be required by the City Engineer when a firm and unyielding foundation is not obtainable.

PLATE VI A

CITY OF ADELANTO

DEAD END FRAME & COVER

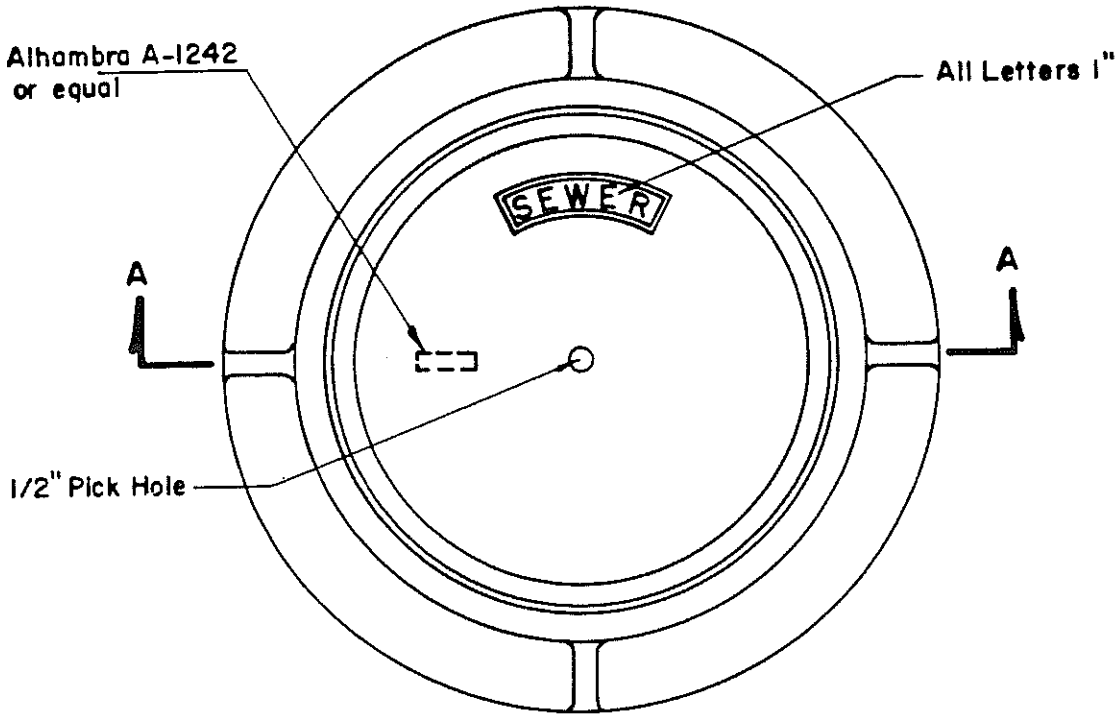

PLAN

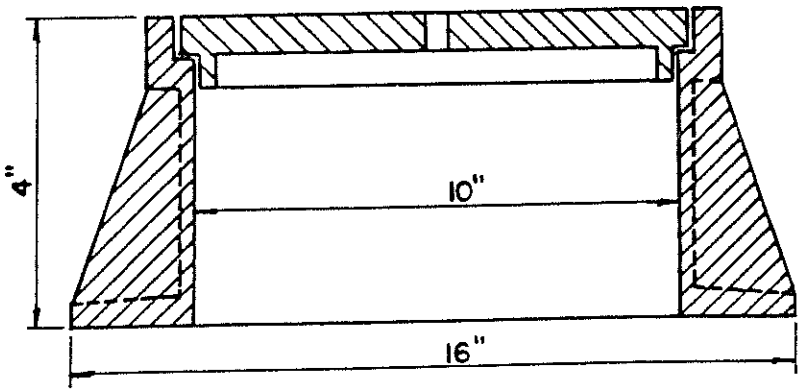

SECTION A-A

NOTE: Covers and Frames machined to fit. Approximate weight = 68 lbs.

PLATE VII

CITY OF ADELANTO

CHIMNEY PIPE

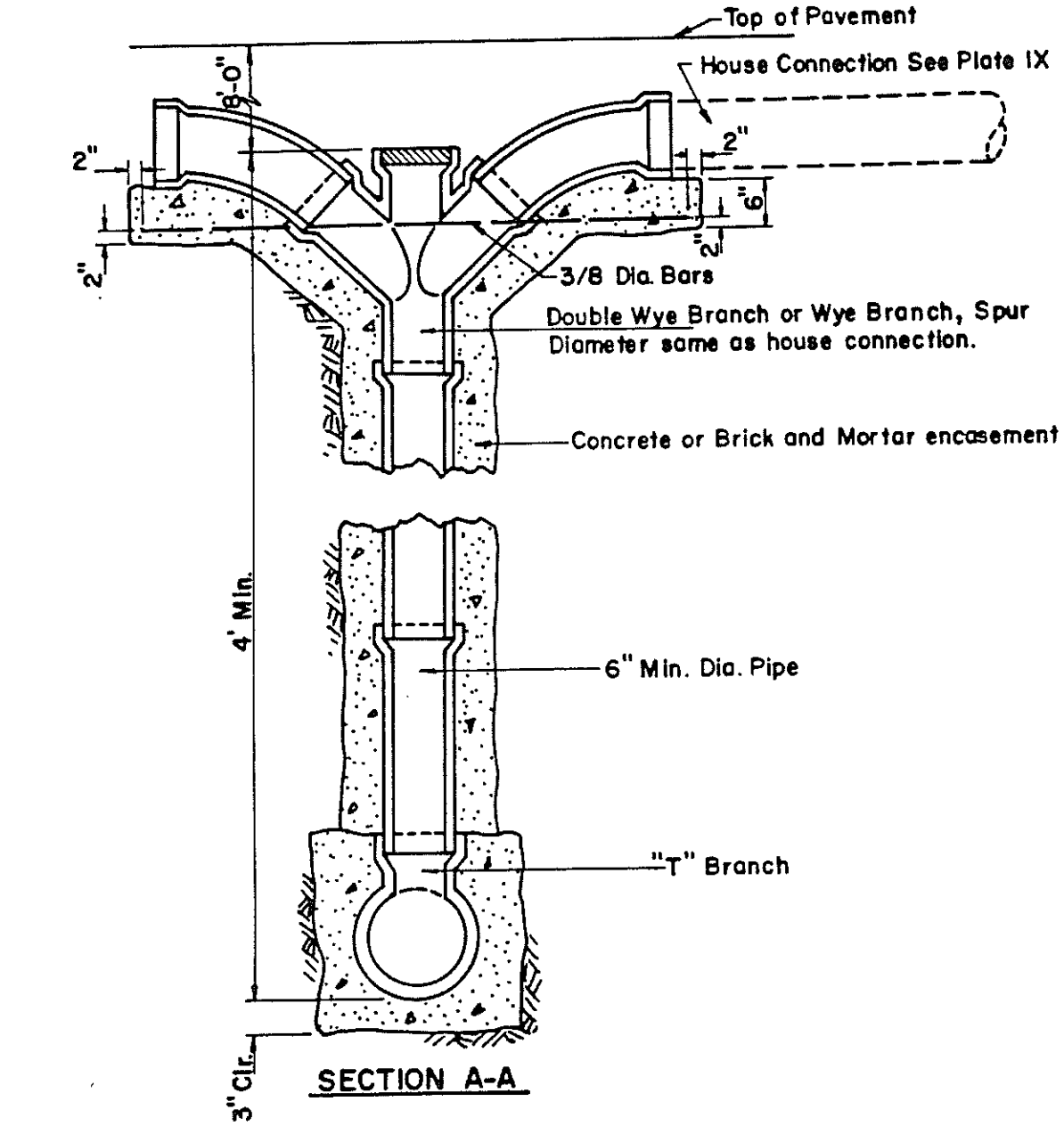

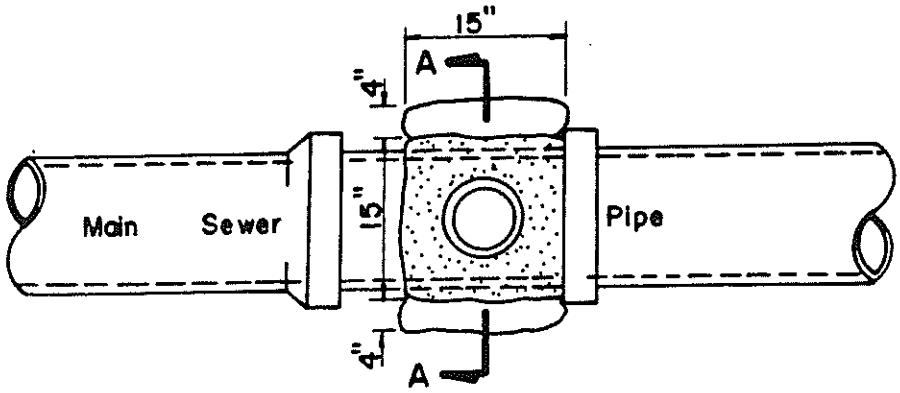

PLAN

PLATE VIII

CITY OF ADELANTO

HOUSE CONNECTION

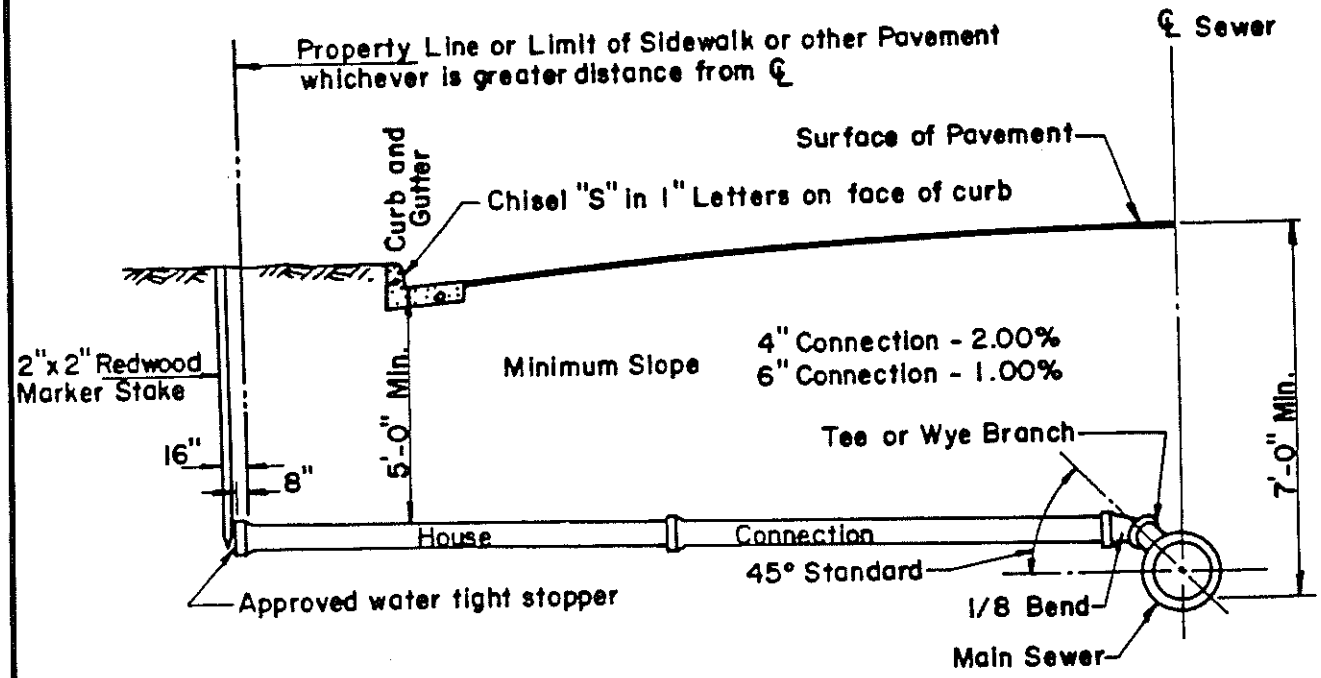

NOTES

1. Where curb and gutter is designated, but not installed, sewer lateral shall be positioned so the minimum clearance will be maintained under proposed curb installation.

2. Where curb and gutter do not exist and are not designed, the lateral shall be positioned so that the minimum clearance at the property line will be 5'-6" as measured from the crown of the existing street.

3. The City shall approve design of connection for multiple family dwellings, commercial lots, schools and places of a greater than normal household water use.

4. Two inch X two inch (2"x 2") redwood marker stakes shall be placed at the end of each house connection. Marker stakes are to be flush with natural ground and extend to the house connection invert.

5. House connection to be at right angles to Main Line Sewer unless location of main sewer does not permit.

PLATE IX

CITY OF ADELANTO

PAVEMENT REPAIR TRENCH EXAMPLE

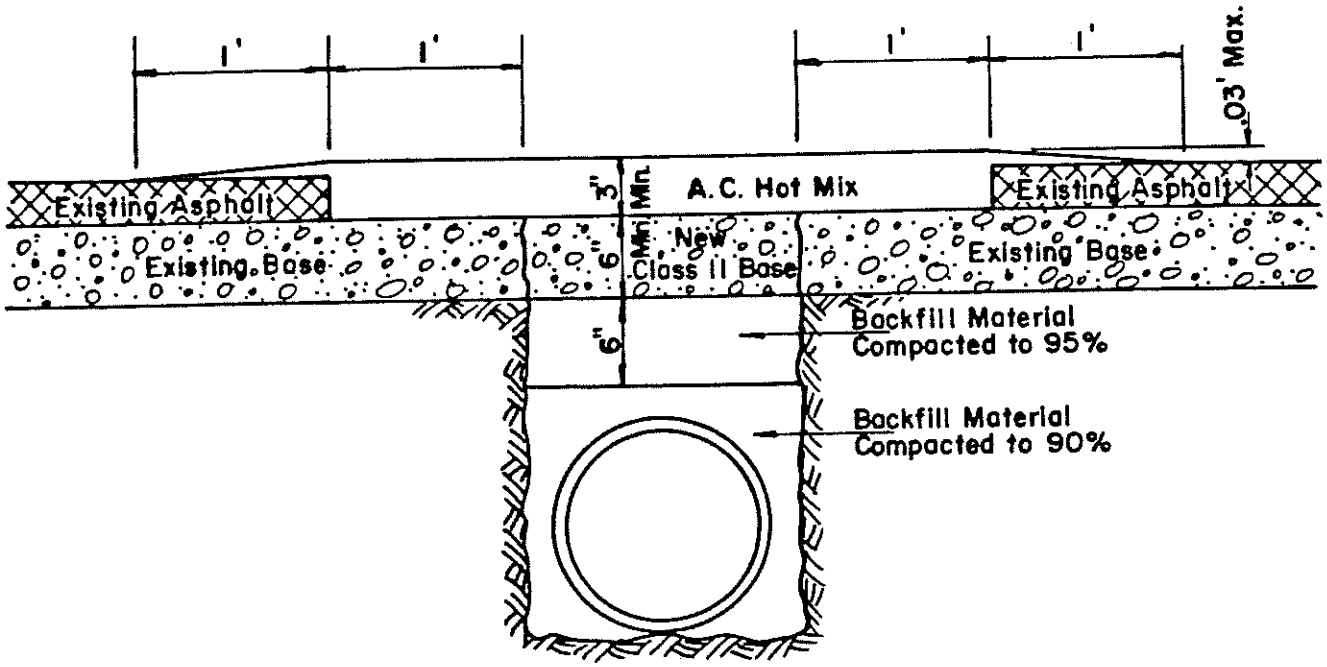

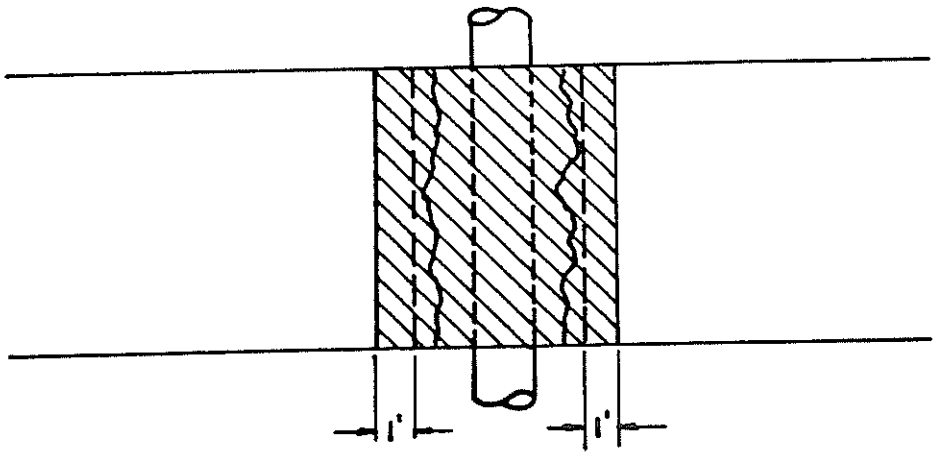

Patch Limits one foot outside damaged pavement.

PLATE X

CITY OF ADELANTO

PAVEMENT REPAIR OVERLAY EXAMPLE

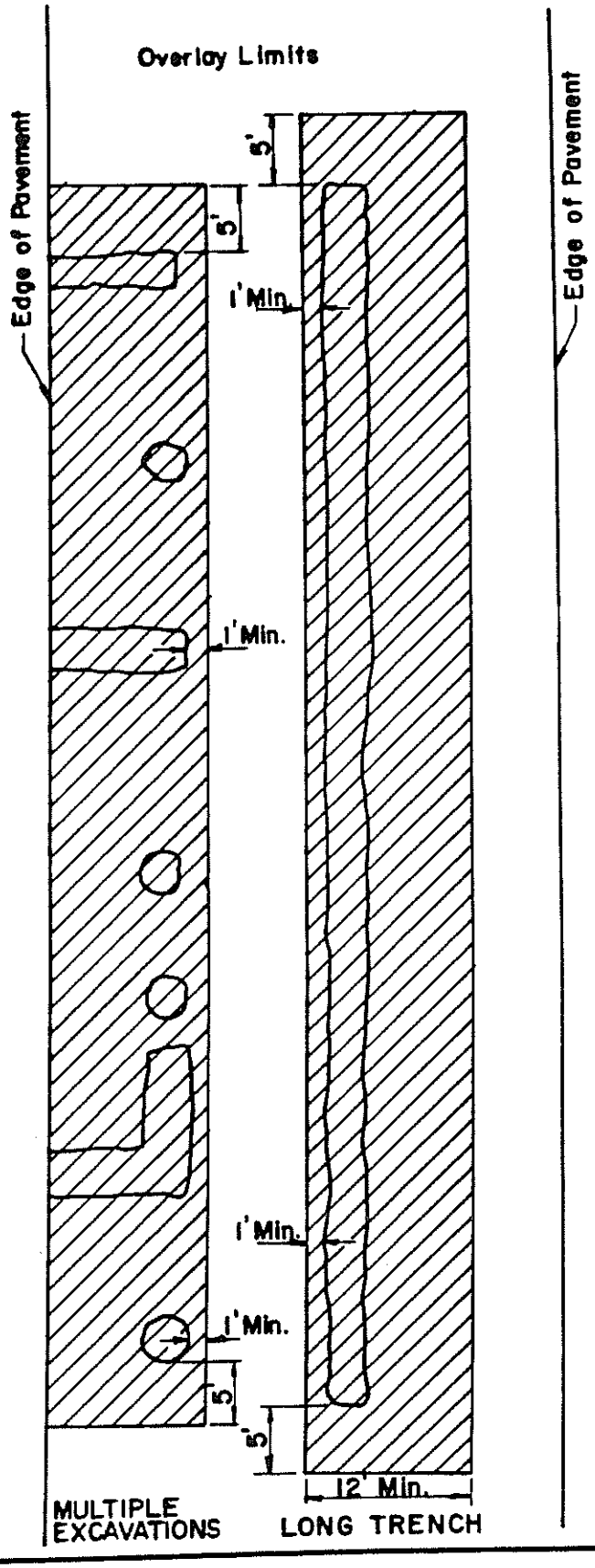

PLATE XI