Adelanto Public Utility Authority

WATER STANDARDS

Revised November 21, 2006

STANDARD SPECIFICATIONS
FOR THE
FURNISHING OF MATERIALS AND THE
CONSTRUCTION OF WATER FACILITIES

ADELANTO PUBLIC UTILITY AUTHORITY
1 1600 AIR EXPRESS WAY
ADELANTO, CALIFORNIA 92301
P.O. BOX 10
ADELANTO, CALIFORNIA 9230 1

November 21, 2006

TABLE OF CONTENTS

Section	Title	Page
1	GENERAL REQUIREMENTS	1-2
	Definitions	1-2
	Conditions	1-2
	Supervision and Inspection	1-2
	Defective Work or Materials	1-2
	Maintenance of Existing Improvements	1-2
	Proximity to Sewers	1-2
	As-Built Drawing	1-2
2	PIPELINE MATERIALS	2-1
	General	2-1
	Polyvinyl Chloride (PVC)	2-1
	Fabricated Steel Pipe	2-1
	Standard (Seamless Steel Pipe)	2-2
	Ductile Iron (DI) Pipe	2-2
	Butterfly Valves	2-2
	Gate Valves	2-2
	Valve Boxes	2-3
	Air Valves	2-3
	Fire Hydrant	2-3
	Blowoff Hydrant	2-3
	Steel Flanges	2-3
	Gaskets	2-4
	Flexible Couplings	2-4
	Flanged Coupling Adaptors	2-4
	Saddles, Corporation Stops, Angle Meter Stops	2-4
	Plastic Water Service Pipe or Tubing	2-4
	Meter Boxes	2-4
	Connection with Existing System	2-4
	Steel Casing	2-5
	Concrete	2-5
	Coal Tar Coating	2-5
	Crushed Rock Bedding	2-5
3	EXCAVATION, TRENCHING AND BACKFILL	3-1
	General	3-1
	Excavation	3-1
	Backfill	3-4
	Cutting Pavement, Sidewalks, Etc.	3-6
	Replacing Pavements, Sidewalks, Etc.	3-6
	Removal of Top Soil and Surface Restoration	3-6
4	PIPELINE INSTALLATION	4-1
	General	4-1
	Hauling and Unloading Pipe	4-1
	Protection of Work and Materials	4-2
	Handling of Pipe and Accessories	4-2
	Installation of Steel Pipe Mains	4-3
	Installation of Ductile Iron and PVC	4-3
	Valve Installation	4-3

Section	Title	Page
4		
	Valve Boxes and Caps	4-4
	Fire Hydrant Assembly Installation	4-4
	Blowoff Assembly Installation	4-5
	Service Installation	4-5
	Concrete Blanket	4-5
	Thrust Blocks	4-5
	Flanged Fittings and Connections	4-6
	Flexible Couplings with Tie Details	4-6
	Connection with Existing System	4-6
	Steel Casing Installation	4-6
	Coal Tar Coatings	4-7
	Disinfection	4-7
5	PIPELINE FIELD TESTS	5-1
	General	5-1
	Pressure Tests	5-1
	Leakage Tests	5-1
	Compaction Test	5-2
6	PAVEMENT REPLACEMENT GENERAL	6-1
	Construction Methods	6-1
	Base Material	6-2
	Pavement Repair	6-2
	Finish Paving	6-3
	Open Graded Paving	6-4
	Bituminous Seal Coat	6-4
	County Roads and State Highways	6-4
7	Public Convenience and Safety Public Convenience	7-1
	Public Safety	7-1
8	Guarantee	8-1

Plates

Plate No.	Title
1	Legend
2	Fire Hydrant Assembly
3	Valve Box and Cap
4	Blow off Assembly
5	Thrust Blocks
6	Combination Air & Vacuum Valve Assembly
7	Marker Post
8	3/4" Through 2" Service Connection
9	Pavement Repair -Trench Ex.
9	Pavement Repair – Overlay Ex.

SECTION 1

GENERAL REQUIREMENTS

DEFINITIONS

The word "City" shall mean the City of Adelanto.

The word "Council" or words "City Council" shall mean the City Council of Adelanto.

The words "City Engineer" shall mean a civil engineer registered as such in the State of California appointed by the City acting either directly or through his properly authorized agents, assistants, inspectors and superintendents.

The word "Contractor" shall mean the person, persons, partnership or corporation duly licensed as such in the State of California to enter into a contract for the performance of the work required.

The word "Plates" shall mean collectively all of the Plates attached to and accompanying these specifications and made a part hereof..

CONDITIONS

On all questions relating to the acceptability of the material, machinery or plant equipment, classification of material or work, the proper execution, progress of sequence of the work, quantities and the interpretation of the specifications or drawings, the decision of the City Engineer shall be final and binding.

The Contractor shall obtain copies of and comply with all applicable current statutes, laws, ordinances, rules, regulations and specifications of the United States Government, the State of California, the County 01 San Bernardino, the City of Adelanto and any other governmental agencies having jurisdiction and shall make application of all required permits an(bear the cost of same.

The Contractor shall furnish to the City, copies of all required permit, and licenses prior to initiation of the work. Upon completion of the work, the Contractor shall supply to the City a letter of approval from the governing body having jurisdiction that the Contractor has met the requirements and conditions of the permits or licenses.

SUPERVISION AND INSPECTION

The City Engineer shall decide within the provisions of the specification, all Questions which may arise concerning the quality or acceptance 01 materials furnished and work performed. The Contractor shall be solely and completely responsible for conditions on the job site, including safety to all persons and property during performance of work. This requirement shall apply continuously and completely and not be limited to normal working hours.

DEFECTIVE WORK OR MATERIALS

No work which is defective in its construction or deficient in any of the requirements of these specifications will be considered as acceptable in consequence of the failure of any inspector connected with the work to point out said defects or deficiency during construction. The Contractor shall correct any imperfect work, without compensation from the City, before final acceptance of the work by the City.
All materials not conforming to the requirements of these specifications shall be considered as defective. They shall be rejected, whether in place or not, and shall be removed immediately from the site of the work by the Contractor at his expense. No rejected material, the defects of which have subsequently corrected, shall be used until approval in writing has been given by the City Engineer.

MAINTENANCE OF EXISTING IMPROVEMENTS

Unless otherwise indicated on the plans or in these specifications, or unless otherwise cared for by the owner of a public utility or franchise, all water, gas, oil or migration lines, lighting, power or telephone conduits or wires or sewer lines, structures or house laterals in place, and other surface or sub-surface structures or lines, shall be maintained by the Contractor and shall not be disturbed, disconnected or damaged by him during the progress of the work; provided, that should the Contractor in the performance of the work disturb, disconnect or damage any of the above, all expenses, of whatever nature arising from such disturbance or in the replacement or repair thereof shall be borne by the Contractor.

PROXIMITY TO SEWERS

If the horizontal separation between parallel sewer and water lines must be less than 10 feet or if the sewer crosses shallower than one foot below the water main, special construction is required by the State Department of Health Services and must be approved by the City.

AS-BUILT DRAWINGS

The Contractor shall keep a separate set of construction plans upon which he shall designate in
appropriate markings, as-built conditions using sufficient sketches to properly delineate locations of valves, services and other pertinent items. All measurements shall be accurate within one foot. Prior to filing of the Notice of Completion, the Contractor shall certify as to the as-built conditions in a letter transmitting the plans and sketches to the City.

SECTION 2

PIPELINE MATERIALS GENERAL

GENERAL

Distribution mains 12-inch or smaller shall be constructed of polyvinyl chloride (PVC), or ductile iron (Dl) unless otherwise approved. Sixteen- inch or larger pipeline shall be constructed of fabricated steel pipe, or ductile iron (Dl). All material in the pipeline work shall be new and unused. A 14 gauge copper wire shall be furnished and installed with all PVC pipe as an aid for future location by electronic means. All materials shall be suitable for at least 150 psi working pressure unless otherwise approved.

POLYVINYL CHLORIDE (PVC)

Polyvinyl chloride pipe shall be Class 150, cast-iron pipe dimensions, gasketed bell-joints in accordance with AWWA Standard C900 for Polyvinyl Chloride (PVC) Pressure Pipe, 4 inch through 12 inch. C905 for Polyvinyl Chlorine (PVC) Pressure Pipe 14 inch through 36 inch for Water. Fittings used with PVC pipe shall be cement mortar lined cast or ductile iron complying with all applicable requirements of AWWA C110 and C153.

FABRICATED STEEL PIPE

Steel pipe and fittings shall be lined and coated with cement mortar. Pipe joints shall be bell and spigot "0" ring, flanged, or gasketed sleeve-type unless otherwise specified. Steel pipe shall meet the requirements of Federal Specification Ss-P-385a, Pipe, Steel, (Cement-Mortar Lining and Reinforced Cement-Mortar Coating latest edition) or AWWA Standard C200, for Steel Water Pipe 6 "and larger. Cement shall be type 11. Minimum cylinder thickness shall be ten gauge (0.135 inches).

Applicable sections of the following standards apply:

Standard	Item
AWWA C206	Field Welding
AWWA C207	Steel Pipe Flanges
AWWA C208	Steel Pipe Fittings
AWWA C300 or C301	Rubber Gaskets

Fabricated steel fittings shall be of 3/16 inch minimum thickness steel. All cut-outs in fabricated steel pipe shall be reinforced with a doubler plate of at least equal cross-sectional area welded to the pipe.

All buried flange connections on fabricated steel pipe shall be made with a flange by plain-end or flange by bell tail pieces no longer than two times the nominal diameter of the pipe so as to provide a flexible joint near each flanged joint except where welded joints are required.

STANDARD (SEAMLESS STEEL) PIPE

Pipe shall be Schedule 40 seamless steel pipe conforming to 20. Pipe sizes up to and including three inches shall have threaded ends. Pipe four inches and larger shall be black unless otherwise specified and have plain ends for welded flange connections. All buried black steel pipe shall have protective lining and coating in accordance with any of the following systems:

AWWA C202	Coal Tar Coatings & Linings
AWWA C205	Cement-Mortar Lining & Coating
AWWA C209	Cold Tape Coatings
AWWA C120	Coal Tar Epoxy Coating
AWWA C213	Fusion-Bonding Epoxy Coating

DUCTILE IRON (DI) PIPE

Ductile Iron pipe and fittings shall be cement mortar lined. Pipe joints shall be mechanical joint or push-on type. Applicable sections of the following standards apply.

Standard	Item
AWWA C151	Ductible Iron Pipe
AWWA C104	Cement Mortar Lining
AWWA C110 & C153	Fittings
AWWA C111	Rubber Gasket Joints

Unless otherwise specified, all material shall be suitable for 150 psi g pressure and ductile iron pipe shall be thickness Class 50 min.

BUTTERFLY VALVES

Butterfly valves may be installed in lieu of gate valves for sizes 10 "and larger. Butterfly valves and operators shall be designed for. Valves shall be flanged style with manual operators, shall open counterclockwise. The dimensions of the operator in accordance with Section, "Wrench Nuts and Handwheels" of AWWA C500. Valves and operators shall conform to all the requirements of AWWA C504 and shall be Mueller, Clow, and Pratt or approved equal with resilient seat.

GATE VALVES

Gate valves four inches and larger shall be resilient seat conforming to all requirements of AWWA C509. Valves shall be flanged style, have o-ring stem seals, be epoxy lined, open counterclockwise and be Mueller, Clow or approved equal.

Gate valves less than four inches in size shall be non-rising stem, bronze, with wedge discs and threaded ends as manufactured by Ohio, Rass, Mueller or approved equal.

VALVE BOXES

Valves boxes and caps shall be furnished and installed with all buried valves. The valves boxes shall be of the two piece adjustable type with cast iron caps. The valve boxes shall have walls not less than ten gauge steel and the nominal diameter shall not be less than six inches.

Valve boxes shall be asphalt dipped. The cast iron caps shall be painted blue and have the word "WATER" cast into them.

AIR VALVE

The air valve shall be designed to permit automatic escape of large quantities of air from the pipeline when line is being filled and permit air to enter the pipeline when line is being emptied. It shall also allow accumulating air to escape while the line is in operation under pressure. Valves shall be APCO "Heavy Duty" Combination Air Release Valves No. 143ct, 145c, or 147ct depending upon size specified on the Plans.

FIRE HYDRANTS

Fire hydrants shall be of the dry-barrel break-off traffic type and shall conform to AWWA CS02 with 6 inch inlet. Nozzle threads shall be American National Standard. Operating nut shall be 1-112 inch National Standard pentagon. The valve stem shall be equipped with O-ring seals and shall open when turned left or counterclockwise. Fire hydrants shall be epoxy lined and shall be painted chrome yellow and equipped with metal caps. Hydrants shall be Mueller Modem Centurion, Kennedy K-81, American Darling 8-84-8, or AVK Series 27 Dry Barrel Hydrant.

Furnish catalog and maintenance data (including illustrations and a schedule of parts and the materials of which they are made) to use in maintenance of the hydrant as well as in ordering repair parts.

BLOW OFF HYDRANT

The hydrant on the 4-inch blow off assembly shall be a model J-344 H.P. by James Jones Company with 4-inch inlet and 2-112 inch hose connection outlet, Clow Model 123 or approved equal.

STEEL FLANGES

Steel flanges shall be AWWA Class D ring type or blind type as required sizes as shown.

GASKETS

Gaskets for flanged joints shall be ring type 111 6 inch thick for pipe ten inch and smaller and 118 inch for larger pipe. Gaskets shall be Johns Manville Type 60 or Crane "Cranite", and shall conform to applicable requirements of AWWA C207.

FLEXIBLE COUPLINGS

Flexible couplings shall be equal to Rockwell 41 1 steel couplings by Rockwell International and shall be coated with twelve mil thickness of fusion bonded epoxy conforming to AWWA C213.

FLANGED COUPLING ADAPTORS

Flanged coupling adaptors (FCA) between flanged fittings and PVC pipe or ductile iron pipe shall be Rockwell 912 Cast FCA. For steel pipe use Rockwell 913 Steel FCA, or approved equal. Steel FCA's shall be lined with twelve mil thickness of fusion bonded epoxy in accordance with AWWA C213.

SADDLES, CORPORATION STOPS, ANGLE METER STOPS

All service saddles, corporation stops, angle meter stops and such appurtenances shall be compatible with material selected and be equal to those manufactured by James Jones Company, Mueller Company, or Ford Meter Box Company, Inc. Saddles for PVC pipe shall be designed specifically for C900 PVC
pipe, stainless steel, double strap.

PLASTIC WATER SERVICE PIPE OR TUBING
Plastic water service pipe, tubing and fittings shall be Class 160 and conform to AWWA C901 Standard for Polyethylene (PE) Pressure Pipe, Tubing, and Fittings, 112 inch through 3 inch, for Water. An affidavit of compliance shall be submitted stating that all materials delivered comply with the requirements of this standard. Material shall be manufactured by Philips Products Company, Wesflex
Company or approved equal. All PE pipe shall be iron pipe size, IPS except 2 inch and above may be C.T.S. if it is approved by the city.

METER BOXES

Meter boxes shall be pre-cast concrete with one piece cast iron traffic covers as manufactured by Brooks Products, Inc. or approved equal. Size shall be as appropriate to accommodate the size and number of meters and shutoff valves to be installed within each. Meter boxes installed within sidewalks or landscaping areas shall be pre-cast concrete with one piece concrete covers designed for remote-read meters manufactured by J&R or H&C.

CONNECTION WITH EXISTING SYSTEM

All materials necessary to make connections between proposed and existing systems per details shown on the Plan shall be furnished by the Contractor and shall be of the size and class shown on the accompanying Plans. Items indicated to be salvaged on the Plans but not used on this project shall become the property of the City and shall be delivered to the City Yard unless otherwise directed.

STEEL CASING

Casing shall be a minimum one-fourth (114) inch thick wall or in accordance with the requirements of the governing agency whichever is greater, and shall be manufactured in accordance with American Water Works Association (AWWA) Standard C200, latest revision entitled, "AWWA Standard for Steel Water Pipe Six Inches and Larger".
The casing shall be round and straight, free from protruding bolts, rivets or welds, and shall have an inside diameter of not less than the maximum diameter of the pipeline plus six (6) inches. The ends of the Steel Casing Pipe to be jacked or bored into place shall be prepared to withstand pressures created by jacking the pipe into place. Where jacking is not necessary pipe may be twelve gauge corrugated steel, galvanized and asphalt coated.

CONCRETE

Portland Cement shall conform to ASTM Standard Specification C 150, latest - revision, entitled "Portland Cement", and shall be Type I or 11. Cement in containers that have been broken in shipment or handling may be used only if approved by the Owner.

Sand shall consist of well-graded, natural or artificially washed sand that has clean, hard, strong matter. Sand shall not contain over three (3) percent clay or silt by weight.

Coarse Aggregate shall consist of gravel, or a combination of gravel and crushed rock, having clean, hard, tough, durable and uncoated pieces free from injurious amounts of soft, friable, thick, elongated pieces, alkali, oil, organic or other deleterious substances. Aggregate shall be properly graded, from 1 inch to 1-1 inch in size, to secure the required compressive strength concrete.

Water shall be clean, free from injurious counts of oil, acids, organic-matter or other injurious substance.

Mixing -Concrete required for thrust blocks and other water systems shall be composed of the following relative volumes of materials:

1 cubic foot of cement (one sack = 94 lbs.)
2 cubic feet of sand (dry, loose)
3 cubic feet of coarse aggregate
Only sufficient water shall be used to produce a concrete with a slump of not to exceed four inches, as determined by ASTM Standard Method of Test, C143, latest revision. The total volume of sand and coarse aggregate measured separately shall not exceed six cubic feet.

per sack of cement. Concrete shall be placed within thirty minutes of mixing and no retempering will be permitted. Batch slips shall furnished by the Contractor when requested by the Owner, if Mix Concrete is supplied. Unless otherwise specified, all shall have a twenty-eight day compressive strength of 2,500 psi minimum and shall contain 5.5 sacks of cement per cubic yard of concrete.

COAL TAR COATING

Coal tar mastic for buried ferrous metal surfaces shall be Kopper 505, Tnemec 46-450 or approved equal.

CRUSHED ROCK BEDDING

Crushed rock bedding at by the City Engineer and required by the Contractor shall be sound, crushed aggregate free of lumps or balls of clay, with 100% passing through a Standard Series sieve and 0 to 20 % passing a No.4 mesh sieve.

All crushed rock shall be approved by the City Engineer.

SECTION 3

EXCAVATION, TRENCHING AND BACKFILL

GENERAL

The work covered by this portion of the specifications consists of the furnishing of all plant, labor, equipment, appliances, and materials and the performance of all operations in connection with excavation, trenching, and backfilling for water mains and appurtenant structures, in strict accordance with the specifications and the applicable drawings.

In case of conflict in the requirements for excavation, trenching and back- filling between these specifications and any statutes, laws, ordinances, rules, regulations and specifications of any political subdivision or agency having jurisdiction, it shall be understood that the more exacting requirements shall govern. In general, these specifications will apply in City right-of-ways and easements and the aforementioned statutes, laws, ordinances, rules, regulations and specifications of any political subdivision or agency having jurisdiction will apply within the political boundaries or public right-of-ways to which they apply.

EXCAVATION

The Contractor shall perform all excavation of every description and of whatever substances encountered, to the depths and alignment indicated on the construction drawings or as otherwise specified. During excavation, material suitable for backfilling shall be piled in an orderly manner, a sufficient distance from the banks of the trench to avoid overloading and to prevent slides or cave-ins. All excavated materials not required or suitable for backfill shall be removed and wasted by the Contractor.

Such grading shall be done as may be necessary to prevent surface water from flowing into trenches or other excavations. The Contractor shall remove, by pumping or other means approved by the City, any water accumulated in the trench from any source.

Suitable shoring, timbering or sheeting shall be provided by the Contractor where necessary to support the sides of the trench prior to and during the installation of the pipe. The shoring methods and procedure shall be consistent with safety and shall be removed as the trench is being backfilled.

Unless otherwise indicated, excavation shall be by open cut except that short sections of a trench may be tunneled if, in the opinion of the City, the pipe can be safely and properly installed and backfill can be properly tamped in such tunnel sections.

Excavations, shoring, timbering, and sheeting shall be accomplished as per provisions of California Code of Regulations, Title 8 (8CCR) General Requirements for excavations. The Contractor performing such work shall be responsible for following proper safety procedures when conducting such operations.

All spoil shall be thrown on one side of the trench only to facilitate distribution and installation of pipe in such a manner that it will not endanger the work and will avoid obstructing roads and driveways. Adequate provisions shall be made for maintaining the flow of water course, drains, sewers or ditches crossing the trench, and upon completion of the work, they shall be restored to their original condition. A minimum of 2 feet free space shall be maintained between the edge of the trench to the beginning of the spoil pile at all times.

The use of trench digging machinery will be permitted except where its operations will cause damage to trees, buildings or existing structures above or below the ground. At such locations, hand methods shall be employed to avoid such damage. Trees, fences, poles and other property shall be protected unless their removal is authorized. Any property damaged shall be satisfactorily restored by the Contractor.

The Contractor shall provide his own access and proper clearance for installation of pipe in easements. Removal and disposal of all trees, stumps, roots, brush and other objectionable material shall be provided by the Contractor all in accordance with the approval of the City.

Cut all bituminous and concrete pavements, regardless of the thickness, and curbs and sidewalks, prior to excavation of the trenches with an approved pavement saw, hydrohammer, or other approved pavement cutter. Width of the pavement cut shall be at least equal to the required width of the trench at ground surface plus one foot on each side. Pavement and concrete materials removed shall be hauled from the site and not used for trench backfill.

Except with specific approval of the City Engineer, no more than 400 feet of open trench shall be excavated in advance of laying of pipe. All operations shall be carried out in an orderly fashion. Backfilling and clean-up work shall be accomplished as sections of the pipe installation are approved. Public travel through the work shall be impeded or obstructed as little as possible. At the end of each working day, there shall be a maximum of 50 feet of open trench excluding vault excavations for each operations. The remainder of the trench excavated that day shall be backfilled, compacted and the roadway opened to the public.

At the end of each week all trenches, including manholes excavations, shall be backfilled, compacted and the roadway opened to the public on Saturday, Sunday and holidays.

The overall trench width shall not be more than 24 inches wider than the largest outside diameter of the pipe to be laid therein, measured at a point 12 inches above the top of the pipe exclusive of branches.

Confine trench widths to dedicated rights-of-way for public thoroughfares or within areas for which construction easements have been obtained, unless special arrangements have been made with the affected property owners.

Trench walls shall be as close to vertical as possible. The maximum width of trench normally shall be 4 feet plus the largest outside diameter of the pipe to be laid therein, measured across the top of the trench. If the Contractor chooses to excavate wider than this maximum rather than providing the necessary supports, he shall repair or replace all pavement and other improvements damaged due to the wider excavation at his own expense and to the satisfaction of the City Engineer.

Minimum cover over- the pipe in areas where-grade is not shown on the Plans shall be forty-two inches. Depth of cover shall be measured from the established street grade or the surface of permanent improvement to the top of the pipe barrel. In the case of lines outside of existing or proposed street right-of-way, the depth of cover shall be measured from the average natural ground surface. Any deviation shall be subject to approval of the City Engineer.

Bell holes and depressions for joints shall be dug after the trench bottom has been properly graded and shall be only of such length, depth and width as necessary for properly making the particular type of joint.

Where the bottom of the trench is in rock or hard materials, the trench shall be excavated four (4) inches below grade. Where the trench has been excavated below grade for any purpose, the trench shall be refilled to the proper trench grade with selected backfill material compacted to 90 percent of its maximum density as determined by ASTM 1556 and D 1557.

Excavation behind all fittings requiring thrust blocks shall not be machine dug, but shall be hand dug to keep the trench wall solid and undisturbed.

Pipelines are to be laid in accordance with the Plans and grades shall be uniform. No high or low points in the line shall be permitted except as shown on the Plans or to conform to the general grade of the street or con- tour of the terrain.

In event blasting is necessary for excavation, the Contractor's method and procedure shall conform to all applicable laws and regulations.

All excavations shall be kept free of water while concrete or pipe is being placed and until concrete has attained its initial set to eliminate any possible damage from such water. The Contractor shall furnish, install and operate all necessary machinery, appliances and equipment to keep excavations sufficiently free from water from any source during construction of the work to permit proper pipe laying and joining and shall dispose of water so as not to cause injury to public or private property or to cause a nuisance or a menace to the public.

Adequate provision shall be made for maintaining the flow of water course, drains, sewers or ditches crossing the trench and upon completion f the work, they shall be restored to their original condition.

Groundwater control shall be provided at those locations where the ground- water is higher than a plane one foot below the bottom of the pipeline.

At those locations where the Contractor elects to utilize rock sub-base as a method of controlling groundwater during the construction of the facilities, said rock sub-base shall be provided by the Contractor.

BACKFILL

General- Backfilling of the trench around the pipe and excavation around appurtenances shall follow the installation as closely as possible. Backfill shall be accomplished in two stages: (1) Initial backfill from proper trench grade to twelve (12) inches over the pipe; (2) Final backfill from twelve (12) inches over the pipe to surface.

Initial Backfill -Initial backfill should be accomplished as soon as possible after the pipe has been laid. The backfill material shall be approved by the City and shall contain no particles larger than one (1) inch or other objectionable material. The material shall be sufficiently damp to permit thorough compaction on all sides of the pipe free kern voids. Initial backfill shall consist of placing the backfill from proper trench grade to an elevation of twelve (12) inches over the top of pipe by the following procedure:

The first lift of material shall be uniformly placed on both sides of the pipeline for the full width of the trench and have a maximum loose depth of not more than six (6) inches as measured from the trench bottom. This material shall then be tamped or shovel-sliced under and around the pipe joints until all voids underneath and around the pipe and joints have been filled.

After the voids beneath the pipe have been filled, the material between the trench walls and the pipe shall be compacted, with each layer firmly compacted prior to placing the subsequent material, until the material has reached a minimum depth of the horizontal centerline of the pipe line. From the horizontal centerline of the pipe line to a depth of twelve (12) inches over the pipe lines, the backfill material shall be placed in horizontal layers not exceeding eight (8) inches in depth and properly compacted by tamping.

Flooding of the initial backfill may be permitted with prior approval of the City. Flooding of the initial backfill will be permitted when the material contains no rocks larger than one (1) inch and has a sand equivalent value of not less than 20 as determined by Test Method No.217 of the California Division of Highways.

Alternate -Initial backfill shall consist of placing saturated sand as approved by the City, from either onsite or off-site sources, from proper trench grade to a compacted elevation of twelve (12) inches above the top of the pipe. The sand shall be properly saturated before placement in the trench.

This material may be placed in one lift provided adequate rodding or vibrating during placement is performed to assure filling of all voids under and around the pipe. Care should be taken to avoid floating of pipe in all cases. This method of initial backfill shall be used only when the native material in the trench permits adequate drainage and is suitable in the opinion of the City. There shall be no free water standing on the surface of the initial backfill at the time final backfill is placed.

Final Backfill -The balance of backfill shall contain no particles larger than six (6) inches in its greatest dimension or such smaller dimensions as specified by the governing body having jurisdiction and shall be free from brush or any other perishable or objectionable matter that would prevent proper compaction, consolidation or that might cause subsequent settlement. Backfill in easements not subject to vehicular traffic shall be compacted to a minimum of 85 percent of maximum density as determined by ASTM D 1556 and D 1557. In roadways, shoulders, driveways, etc. where subject to vehicular traffic the backfill shall be compacted to a minimum of 90 percent of maximum density. Backfill within 6
inches of the grading plane for base or paving shall be compacted to 95 percent of maximum density at optimum moisture content. Compaction within existing or proposed streets shall also meet any higher standards of the governing authority.

Flooding and or jetting of the material to accomplish compaction will not be permitted without prior authorization by the City. For trenches eight (8) feet in depth or less, the final backfill may be placed in compacted lifts of twenty-four (24) inches, or one-half (112) of the trench depth, whichever is the greater depth. For trenches greater than eight (8) feet in depth, the material shall be placed in maximum compacted lifts of four (4) feet. The depth of fill lifts in trenches on slopes may be reduced by the City Engineer to facilitate compaction.

Any deficiency in the quantity of material for backfilling the trenches or for filling depressions caused by settlement shall be supplied by the Contractor. Surplus spoil shall be crowned over the trench, spread or hauled away as directed by the City.

Backfill within traveled streets or highways, existing or proposed, shall meet the standards and approval of the agency or proper authority having jurisdiction over same.

Trenches improperly backfilled, or where settlement occurs, shall be reopened to the depth required for proper compaction, then backfilled and compacted, with the surface restored to the required grade.

Where flooding and/or jetting have been approved by the City, backfill shall be thoroughly consolidated by use of water jets. The Contractor shall use water jets of at least one and one-quarter (1-114) inches in diameter and of sufficient length to extend to within one foot of the top of the pipe.

Where water is readily available in sufficient quantity and pressure, the backfill may be flooded by the following method. The water shall be allowed to flow slowly into the trench from the upper end, and shall be worked down to the bottom of the trench by "poling". Care shall be taken to insure that water does not flow through the trench before it has penetrated down to the pipe line.

CUTTING PAVEMENT, SIDEWALKS. ETC.

Pavement or other street surfaces shall be saw cut to neat straight lines only to the minimum width which will permit the proper excavation and bracing of the trench. Sidewalks generally shall be removed to regular lines and squares but, where practicable, removal may be avoided by tunneling. Where possible, the cutting of curbs shall also be avoided by the use of tunnels.

REPLACING PAVEMENTS, SIDEWALKS, ETC.

Where hard surface pavement has been cut, the Contractor shall either provide and maintain a temporary surface of gravel or maintain a plank surface across these cuts as required by the Engineer from the time the backfilling is done until the pavement is replaced. Plank shall not be less than three **(3)** inch material shall be cut to fit and be laid flush with the pavement surface on the roughly compacted bed of backfilled material.

All pavement cuts shall be replaced in kind as specified in Section *6,* Pavement Replacement and in full conformity with the requirements of any governing body having jurisdiction. New materials shall be used and the finished repair shall be satisfactory to the City Engineer. In the case of gravel surfacing, the original material may be used if suitable for the purpose. It is the intention of these specifications that all surfaces shall be restored to their original condition as nearly as possible. Any pavement or roadway surfacing not immediately over or adjacent to the trench, but which is disturbed or damaged as the result of operations of the Contractor shall be repaired or replaced by the Contractor at his own expense and to the satisfaction of the City Engineer.

Sidewalks, curbing, pipe from street inlets, drains, and other existing improvements which are disturbed or damaged shall be replaced to the satisfaction of the City Engineer and in such manner as to serve as satisfactorily as in their original condition.

REMOVAL OF TOP SOIL AND SURFACE RESTORATION

When trenches cross lawns, pasture land, or cultivated field where reasonable top soil conditions exist, the top soil shall be removed to a depth of twelve (12) inches, stockpiled, and replaced to provide a final ten (10) inches of topsoil in the completed installation. In lieu of stockpiling the topsoil, Contractor may substitute approved borrow topsoil. Damaged areas adjacent to the trench shall be repaired and cleaned-up as directed by the City Engineer.

Sod and landscape plantings will be carefully preserved and restored. The surface shall be restored to a condition at least equal to that which existed prior to pipeline construction.

SECTION 4

PIPELINE INSTALLATION

GENERAL

All foreign matter and dirt shall be removed from the interior of the pipe prior to its installation. Before lowering, the pipe shall be inspected for defects. Any defective, damaged, or unsound pipe shall be rejected. The entire joint including coupling, machined sections of the pipe and the rubber gasket or ring shall be thoroughly cleaned at the time the joint is made. The entire procedure and method of installation of the pipe and making joints shall be done in a workmanlike manner and shall be in strict accordance with the pipe manufacturers direction and recommendations.

All pipe shall be laid according to the size, class, location and grade shown on the Plans. The faces of all spigot ends and all shoulders in the hubs or sockets must be true and brought into firm contact. Rubber ring installation shall be checked with suitable gauges to insure that they are located in the proper position relative to the pipe ends.

When pipe laying is not in progress the unfinished end of the pipe shall be securely closed with a suitable plug or cover to prevent the entrance of animals or foreign matter into the line.

The Contractor shall take all necessary care and precautions to prevent the pipe from floating due to water entering the trench from any source. The Contractor shall be responsible for damage caused by floating pipe and shall, at his sole expense, restore and replace the pipe to its proper condition, alignment and grade.

Where pipe is laid on a curve or at horizontal or vertical angles in the trench, the maximum deflection at the joint shall not exceed sixty (60) percent of the limitations specified by the pipe manufacturer and each joint shall be adequately blocked to take the thrust until properly backfilled.

HAULING AND UNLOADING PIPE

During loading, transportation and unloading, every precaution shall be taken to prevent injury to the pipe, its lining and its coating. No pipe shall be dropped from cars or trucks nor allowed to roll down skids without proper restraining ropes. Each pipe shall rest upon suitable pads, skids, strips or blocks during transportation and while awaiting installation in the field, and shall be securely wedged or tied in place. Padding shall be used on all car, stakes, skids and other material to prevent damage of the coating during transportation and handling.

Where necessary to move the pipe longitudinally along the trench, it will be done in such a manner as not to injure the pipe or its coating. Pipe shall not be rolled or dragged on the ground.
Where pipe is placed in stock piles, it shall be neatly piled and blocked with strips between tiers.

PROTECTION OF WORK AND MATERIALS

The Contractor shall at all times take care to protect and preserve all materials to be used in the laying of the pipe. The pipe shall be handled in such a manner as not to injure its shape. All pipe and materials which, in the opinion of the City, have been damaged shall be replaced by the Contractor at his own expense.

The Contractor shall be responsible for the safe storage of all material furnished by him until it has been incorporated in the completed project. All material damaged or broken by the Contractor, shall be replaced in exact type and kind by the Contractor at his expense. All materials received by the Contractor and not used shall be removed by the Contractor at his expense.

HANDLING OF PIPE AND ACCESSORIES

Pipe and accessories shall be unloaded at the point of delivery, hauled to, and distributed at the site of the project by the Contractor at his expense. They shall at all times be handled with care to avoid damage. Whether moved by hand, skid ways or hoists, material shall not be dropped or bumped against pipe or accessories already on the ground or against any other object on the ground.

In distributing material at the site of the work, each piece shall be unloaded opposite or near the place where it is to be laid in the trench.
Pipe shall be handled in such a manner as to avoid damage to machined or special ends. Damaged pipe shall be replaced by the Contractor at his own expense.

The interior of all pipe and accessories shall be kept free from dirt and foreign matter at all times. All pipe fittings and accessories shall be carefully lowered into the trench in a workmanlike manner, using proper tools and equipment. Under no circumstances shall pipe or accessories be dropped or dumped into the trench.

INSTALLATION OF STEEL PIPE MAINS

Steel pipe shall be laid according to size, line and grade designated on the Plans.

Before any steel pipe is lowered in place, the trench bottom shall be prepared so that each length of steel pipe shall have a firm and uniform bearing over the length of the barrel. Proper excavation shall be made to receive the bell of each pipe section. All adjustments in line and grade shall be made by scraping away or filling and tamping in under the barrel of the pipe. Wedging or blocking will not be permitted.

Welded steel connections shall be lap joints, welded on the outside only. All welding shall be in accordance with the American Water Works Association C206 "Standard for Field Welding of Steel Water Pipe".

Fittings shall be installed at locations shown on the Plans and shall correspond to the sizes and types indicated on the Plans. Shop fabricated fittings shall be furnished unless field fabricated fittings are designated on the Plans.

Steel pipe joints shall be thoroughly cleaned and coated with cement mortar to a minimum thickness equal to the thickness of the cement mortar coating on the pipe. For pipe smaller than 16-inch diameter only outside joints must be cement mortar coated. For 16-inch and larger, both inside and out- side of joints shall be coated.

The field joint procedure shall be described in the Appendix shown in AWWA C205, "Standard for Cement-Mortar Protective Lining and Coating for Steel Water Pipe", and in accordance with the manufacturer's instructions.

INSTALLATION OF DUCTILE IRON AND PVC

The ductile iron and PVC water mains shall be laid and the work incidental thereto performed in accordance with applicable requirements of AWWA C600 "Standard for Installation of Cast Iron Water Mains." A 14-gauge copper wire shall be installed with all PVC pipe as an aid for future location by electronic means.

VALVE INSTALLATION

Valves shall be installed at the locations shown on the Plans and shall correspond to the size and type of ends shown on the Plans. All valves shall be equipped with a valve box and cap. Valves and all bolted fittings shall be wrapped with 8 mil polyethylene.

The cutting or beveling of pipe for inserting into the bells of valves shall be done in a neat and workmanlike manner without damage to the pipe, its coating or lining and in accordance with the manufacturer's instructions.

All valves shall be carefully lowered into the trench in a workmanlike manner, using proper tools and equipment. Under no circumstances shall valves be dropped or dumped into the trench.

Except in cases of emergency or as directed by the Owner, the Contractor shall not operate gate- valves without an Owner representative present. During the course of water main installation, all valves shall be left completely open or completely closed, unless authorized otherwise by the Owner. Upon completion of the water mains and all appurtenances, all valves shall be operated through a complete open and closed cycle by the Contractor in the presence of the Owner representative. After completion of this operational cycle, all valves shall be left in an OPEN position unless directed otherwise by the City Engineer.

VALVE BOXES AND CAPS

Valve boxes and caps shall be installed to proper finished grade in paved streets and highways. The entire assembly shall be plumb. The valve cap shall be installed with its top one-quarter (114) inch below finish grade unless otherwise directed.

Valve boxes and caps to be installed in areas of presently unpaved street rights-of-way shall be installed twelve (12) inches below finished grade of street or as determined by the governing agency. The Contractor shall be responsible for future location of all valve boxes and caps until completion of paving operations. Marker posts shall be provided and installed by the Contractor to aid future location of valve boxes and caps when located in unimproved roadways. Marker posts shall show distance in feet, and direction of location & quantity of valves.

FIRE HYDRANT ASSEMBLY INSTALLATION

Fire hydrants shall be installed by the Contractor at the locations shown on the accompanying Plans in accordance with details shown on Plate No. 1 and positioned to provide complete accessibility and to minimize the possibility of damage from vehicles or injury to pedestrians. The size and type of hydrant shall correspond to the designation shown on the Plans. The entire hydrant assembly shall be plumb. Nozzles shall be at right angles to the street or as directed by the Engineer. Hydrant shall be located so that the centerline of the riser or barrel is not less than eighteen (18) inches or more than twenty-four (24) inches in back of the curb face of berm on the edge of the street pavement.

Upon completion of the water main and system installation and after the field tests have been performed, each fire hydrant shall be operated by the Contractor in the presence of the City representative. Operation shall consist of opening the fire hydrant assemblies and allowing water to flow freely from one or more of its outlets. Upon completion of this sequence, the fire hydrants shall be turned off and all protection caps properly placed on each outlet.

BLOWOFF ASSEMBLY INSTALLATION

Blow offs shall be installed by the Contractor at the locations shown and in accordance with the details shown on Plate No.3. The entire assembly shall be plumb with nozzles at right angles to the street or as directed by the City Engineer.

Blow offs shall be located to provide complete accessibility and to minimize the possibility of damage from vehicles or injury to pedestrians.

Upon completion of the water main and system installation, each blow off shall be operated by the Contractor in the presence of the City representative. Operation shall consist of opening the hydrant head on the assembly and allowing water to flow freely from its outlet. Upon completion of this sequence, the blow off assembly shall be turned off and all protection caps properly placed on the outlet.

SERVICE INSTALLATION

Services shall be installed at the locations designated by the City and per details shown on the Plans and in accordance with details shown on Plate No.7. Services shall be installed in a workmanlike manner and in accordance with accepted water works standards, with a minimum cover of thirty (30) inches. The Contractor shall install proper size and type service clamps at the main on all service installations.

All PE service lines shall be completely surrounded with a minimum of 4 inches sand (maximum size1 1/4) bedding below the pipe and 6 inches of initial backfill above the pipe.

CONCRETE BLANKET

Concrete blanket shall be installed at all water course crossings in easements where water mains are to be installed. The encasement shall be installed as detailed on the plan and provide protection from flood flows.

THRUST BLOCKS

Concrete thrust blocks shall be installed at all unrestrained dead ends, tees, elbows, and bends, shown on the Plans and in accordance with details shown. The thrust blocks shall be adequate in size to provide for a test pressure on the size of pipe under consideration.

Thrust blocks shall be constructed of concrete between the fitting of pipe and the trench wall. The concrete shall be placed so that it extends to the trench wall in a manner that enables the entire bearing area to be in contact with undisturbed freshly cut material.

Concrete shall be kept behind the bell of the fitting and shall not be permitted to nm against the pipe. Concrete shall be kept clear of all bolts on flanged fittings to enable proper future removal of all such bolts.

FLANGED FITTINGS AND CONNECTIONS

All flanged valves and fittings shall be properly positioned and aligned in the trench in such a manner as to relieve any stress or strain on the connecting pipe or flanged end being fitted with the pipe system resting in its final position and all fittings and valves plumb. Welding, if required, shall be made in the trench bottom, except where otherwise approved by the City. Gaskets shall be coated with thread lubricant.

FLEXIBLE COUPLINGS WITH TIE DETAILS

Where flexible couplings are installed in steel water lines the coupling may be provided with tie rods in lieu of thrust blocks for short runs.

CONNECTION WITH EXISTING SYSTEM

Connections with the existing system will be made by the Contractor at the locations indicated on the Plans per details shown on the Plans. All material necessary for making the system connections shall be furnished by the Contractor.

The Contractor shall schedule connections with the existing system through the Water Department and notify the City forty-eight (48) hours in advance, and the customers that will be out of service twenty-four (24) hours in advance of the time set for making the connections.

STEEL CASING INSTALLATION

Excavation shall not be made in excess of the outer dimensions of steel casing unless approved by the City Engineer. Borings or jacking shall proceed on the lines and grades shown on the plans. Once boring or jacking has commenced, it shall be continued uninterrupted around the clock until completed. Sluicing or jetting with air or water will not be permitted. Should voids or loss of ground occur during the boring or jacking operation, said voids shall be supported on redwood skids in such a manner as to relieve the pipe joints from all load and bearing.

The annular between the steel casing pipe and the pipeline at each end of the casing shall be blocked with bags of cemented sand to prevent back- fill from entering the casing. Provide a two (2) inch drain hole at flow line of casing at lowest end to allow drainage of any leakage.

COAL TAR COATINGS

All buried valves, valve boxes, flanged joints, sleeve-type couplings and other buried ferrous metal items which are not galvanized, mortar coated or otherwise protected from corrosion, shall be thoroughly cleaned and shall be coated with coal tar to a minimum dry film thickness of 17 mils.

DISINFECTION

During the laying of the pipelines covered by these specifications, they shall be carefully protected against contamination, and all dirt and foreign material shall be removed. Before being placed in service, the lines shall be thoroughly flushed out and then disinfected by the Contractor in accordance with A.W.W.A. C65 1 "Standard for Disinfecting Water Mains". All necessary chlorine shall be furnished by the Contractor.

The Contractor shall notify the Water Department to obtain a bacteria sample(s) from the disinfected water line before the Contractor flushes the line. Should the water sample test positive for Total Coli forms, the Contractor shall be required to re-flush the line, re-disinfect, and re-test the water line for Total Coli forms, before placing the line in service.

The main shall be thoroughly flushed by the Contractor before and after chlorination. If the first application of chlorine is not sufficient to clear the mains of coli form bacteria, the procedure shall be repeated until the water will meet the bacteriological drinking water standards of the State and County Health Departments.

SECTION 5

PIPELINE FIELD TESTS

GENERAL

After the pipe as been laid, backfilled and compacted, all laid pipe shall be given a pressure and leakage test. The test section should be tested bulkheads rather than against a "closed" valve to preclude the problem associated with leaking valves. In no case shall a section of pipe be connected to a potable water system and be pressurized prior to disinfection.

Before conducting the field tests, the pipe shall be completely filled with water & free air shall be expelled from the line. Any additional blow offs needed ensure all air is expelled shall be provided by Contractor. The Contractor shall provide his own pumps to properly fill the line with water and produce the test pressures. The required pressures shall be measured at the point of lowest elevation in the line to be tested.

Should any section of pipeline disclose joint leakage, the Contractor shall at his own expense, locate and repair the defective joints until the leakage is within the permitted allowance. The pipe shall then be retested.

Should any section of pipe not withstand the field tests, that section of pipe shall be replaced by the Contractor at his own expense. The pipe shall then be retested.

All thrust blocks forming a permanent part of the line to be tested shall be installed in ample time prior to test to enable the concrete to properly set. The test end of the pipe shall be adequately braced to with stand the pressures that will result during the test.

PRESSURE TEST

The pressure test shall be performed prior to conducting the leakage tests set forth below. The pressure test shall consist of maintaining 175 psi pressure continuously for a period of at least two (2) hours. Prior to the pressure tests, the gate valve on the lateral runs to all fire hydrants, blow offs and air valves shall be closed. Upon completion of the pressure test, all valves on the lateral runs shall be opened.

LEAKAGE TEST

The Leakage test shall be conducted after completion of the pressure test above. The test pressure shall be one hundred seventy-five pounds per square inch and shall be held within five (5) psi.

continuously for at least two (2) hours. The leakage shall be measured by determining the quantity of water required to maintain the test pressure. Regardless of the rate of leakage, all visible leaks shall be repaired.

Unless another method is approved, measurement of leakage shall be by positive displacement measurement of water pumped out of an open container after the pipeline test pressure has been obtained and stabilized. The container shall be of a size and shape to allow simple and accurate determination of capacity and change in volume.

No pipe installation will be accepted by the City until or unless the leakage for the section of line tested is less than the rate of leakage specified herein.

The leakage rate for pipe shall not exceed the rate of 2.5 gallons per inch of diameter per twenty-four (24) hours per mile of pipe.

COMPACTION TESTS

Compaction tests of the trench backfill are required approximately every 300 feet, or more often if tests indicate the need, along the alignment of the main pipeline. Location of test will be determined by the City Engineer. The tests shall be made at varying depths.

The Contractor shall excavate the holes for all the tests, backfill the holes and compact this backfill, and pave the surface, if required, after the test.

Compaction tests of backfill shall be made through an accredited soil testing laboratory approved by the City. Contractor shall furnish all materials, equipment and services required for the tests.

Any additional requirements of other governing bodies having jurisdiction must be met. If the work is done under a permit, the Contractor shall obtain written confirmation that the work is acceptable to the governing body having jurisdiction.

SECTION 6

PAVEMENT REPLACEMENT

GENERAL

The Contractor shall furnish all labor, materials, tools, and equipment necessary and shall construct all temporary and permanent pavement base and surface courses on paved areas affected or damaged by his operations, whether inside or outside the normal trench limits.

All pavement thickness specified herein shall be the thickness required after compaction.

CONSTRUCTION METHODS

Unless otherwise specified, asphalt paving material shall be hot-mix asphalt concrete conforming to Type B, AR4000 3/8-inch maximum as specified in Standard Specifications, State of California, and Department of Transportation.

Prior to placing pavement, all backfill shall have been properly compacted as required in the EXCAVATION, TRENCHING, AND BACKFILL section to eliminate settling of backfill. No pavement shall be placed over poorly compacted backfill.

Backfill and gravel base course shall have been compacted, brought to the proper elevation, and dressed so that new pavement construction shall be at the required grade. The Contractor shall maintain the surface of all excavated and disturbed areas until the pavement is placed. If there is a time lapse of more than 24 hours between completion of preparation of sub grade or placing of gravel base course and placing of paving, or if sub grade or gravel base course has been eroded or disturbed by traffic, it shall be restored to an approved condition before placing paving.

The Contractor shall remove and acceptably dispose of all surplus and unsuitable material.

Unless indicated otherwise, all permanent pavements shall be installed in two courses. Asphalt base courses shall be carefully spread and raked to a uniform surface and thoroughly rolled before application of the upper course.

When installing permanent paving, the edge of existing pavement shall be cut back 12 inches, or more as required, from the trench excavation wall or damaged area to sound, undamaged material, straightened with vertical face, cleaned and painted with cutback asphalt to ensure a satisfactory bond between old and new pavement.

Where feathering and overlapping of equivalent courses are not permitted in permanent paving, the existing surface courses shall be stripped from the bituminous base course for at least a 6-inch width and trimmed square and straight so that new surface shall be placed on undisturbed base course, unless indicated otherwise.

The initial rolling for all courses shall be by steel-wheel power rollers weighing not less than 240 pounds per inch of tread and equipped with a device for watering the roller. No oil shall be allowed on the rollers. Suitable self-propelled pneumatic-tired rollers, subject to the approval of the Engineer, may be permitted for subsequent rolling. Places not accessible to a roller shall be thoroughly compacted with tampers weighing not less than 25 pounds and with a tamping face of not more than 50 square inches. Vibratory compactors may be also used, as approved, for gravel base course. Rolling shall be done to produce the required consolidation, compaction, and finish. When compacting gravel base course to the required density, there shall be no visible creeping or settlement under the final passes of the compacting equipment.

Pavement shall be replaced so that the whole roadway shall have a true and uniform cross section, and the pavement shall conform to the proper grade and cross section with a smooth transition to existing pavement.

BASE MATERIAL

Base material shall be replaced with compacted Class I1 aggregate base to the same thickness as that removed but not less than 6-inches thick. In lieu of base material, additional asphalt concrete (hot mix) may be placed at the ratio 1-inch additional per 2-inch aggregate base. Additional asphalt concrete (hot plant mix) should be placed in 3-inch lifts and compacted prior to placing subsequent lifts.

PAVEMENT REPAIR

Immediately upon completion of backfill, the Contractor shall cap the compacted trench by one of the following methods:

a. A minimum of 2-inch temporary "cold mix" asphalt shall be placed to provide a smooth riding surface. This pavement shall be removed and the backfill regraded at the time of permanent pavement repairs.

b. After compaction of backfill and taking of required tests, the trench shall be graded to provide the proper thickness of asphalt (and base, if required). After tacking the existing pavement (and or placement of base) asphalt concrete (Type B AR4000 318-inch maximum, hot mixed) shall be placed and compacted to finish grade or place hot mixed asphalt to within I-inch of finished surface. Finished surfacing to be placed in the future. This pavement may remain in place at the time of permanent final

paving repair. This work shall be accomplished immediately after backfill, but in no case later than the fifth day following excavation. All trenches shall be backfilled and pavement in place on Saturdays, Sundays, and holidays. Temporary or base course paving shall be maintained in a safe and smooth condition by the Contractor until final pavement is in place. In the event of inclement weather or forecast of the same, the Contractor shall immediately backfill all open trenches and place pavement.

FINISH PAVING

Where asphalt paving has been removed, permanent, finish paving shall be replaced with a minimum based-in 3-inch thickness of Type B AR4000 318-inch maximum hot mixed asphalt concrete within 30 days after completion of back- fill. (This time may be extended due to inclement weather or seasonal weather unsuitable for paving operations.) Finish paving shall be accomplished by a licensed contractor engaged in .the business of pavement repair.

If temporary (cold mix) asphalt has been placed, asphalt (cold mix) shall be removed and backfill graded for finish thickness. All edges shall be tacked and hot mixed asphalt shall be placed in accordance with the following specifications.

If hot mixed asphalt has been placed to within 1-inch of finish grade, finish paving shall be accomplished in accordance with the following specifications:

a. Finish Paving of Trenches Less Than 300 Feet and Lateral Pavement Excavations. Damaged or cracked pavement adjacent to the trench shall be saw cut and removed in rectangular shapes. Existing pavement shall be cleaned.

"Tack coat" shall be uniformly applied on all edges and "squared" up beyond removed asphalt, a minimum of 1 foot. Asphalt concrete shall be placed to provide a smooth riding surface. Finished surface on lateral trench repairs shall not vary more than .03 feet above or .01 feet below existing pavement grade and on longitudinal trench repairs, the grade shall not vary more than .02 feet above nor more than .O1 feet below existing pavement.

b. Finish Paving of Trenches in Pavement over 300 Feet in Length or more than six laterals, trenches and or Pot Holes in 300 Foot Section of Roadway. Pavement shall be overlaid utilizing a self propelled vibrating screen paving machine and hot-mixed asphalt, concrete (Type B, AR4000,3/8-Inch maximum). Area of overlay shall be uniformly tack coated. Asphalt concrete overlay shall be placed parallel to the centerline and shall cover the entire

travel lane width but not less than 12 feet wide. Where pipeline trench crosses centerline, asphalt concrete overlay shall stop 5 beyond and start 5 feet preceding point where extreme outer's of pipeline trench crosses centerline. Asphalt concrete lay at minimum practical thickness (1-inch minimum) shall be laid to provide a dense and smooth riding surface.

OPEN GRADED PAVING

Where open graded paving has been removed, permanent open graded asphalt 11 be replaced as specified in Section 39, Standard " State of California, Department of Transportation, current 'k of replacement of open graded asphalt concrete shall be accomplished by a licensed contractor engaged in the business of pavement repair.

BITUMINOUS SEAL COAT

A seal coat consisting of an application binder and screenings shall be I patch areas where such seal coats existed prior to construction of seal coat to be applied shall be designated as medium. Seal coats shall be as specified in Section 37, Standard Specifications, State of California, Department of Transportation, current edition. Work of pavement repair shall be accomplished by a licensed contractor engaged in the business of pavement repair.

COUNTRY ROADS AND STATE HIGHWAYS

The specifications, policies and procedures of San Bernardino County Transportation Department and Department and California Department of Transportation - CALTRANS shall supersede all other provisions of this Section within their respective jurisdictions.

SECTION 7

PUBLIC CONVENIENCE AND SAFETY

PUBLIC CONVENIENCE

The Contractor shall conduct his operations so as to offer the least possible obstruction and inconvenience to the public and he shall have under construction no greater length or amount of work than he can prosecute properly with due regard to the rights of the public.

Unless otherwise provided in the Special Provisions, all public traffic shall be permitted to pass through the work with as little inconvenience and delay as possible. Where possible, such traffic shall be routed on new or existing paved surfaces.

Spillage resulting from hauling operations along or across any public traveled way shall be removed immediately by the Contractor at his expense.

Construction operations shall be conducted in such a manner as to cause as little inconvenience as possible to abutting property owners.

Convenient access to driveways, houses, and buildings along the line of the work shall be maintained and temporary approaches to crossings or intersecting highways shall be provided and kept in good conditions. When the abutting property owner's access across the right-of-way line is to be eliminated or to be replaced by other access, the property owner's access shall not be closed until the replacement access facilities are usable.

Water or dust amendment shall be applied as required for the alleviation or presentation of dust nuisance.

In order to expedite the passage of public traffic through or around the work, the Contractor shall install signs, lights, flares, barricades, and other facilities for the sole convenience and direction of public traffic. Also, the Contractor shall furnish competent flagmen whose sole duties shall consist of directing the movement of public traffic through or around the work.

PUBLIC SAFETY

Whenever work is being performed adjacent to a lane carrying traffic, the edge of lane or edge of pavement shall be delineated by placing temporary portable delineators adjacent, thereto.

Whenever the Contractor's operations create a condition hazardous to traffic or to the public, he shall, at his expense and without costs to the City, furnish, erect, and maintain such fences, barricades, lights, signs, and other devices, and take such other protective measures as are necessary

to prevent accidents, damage, or injury to the public. The Contractor shall also furnish such flagmen as are necessary to give adequate warning to traffic or to the public of any dangerous conditions to be encountered. Signs, lights, flags, and other warning and safety devices shall conform to the requirements set forth in the current "MANUAL OF TRAFFIC CONTROL - Warning signs, Lights, and Devices for the Use in Performance of Work upon Highways", issued by the State of California Department of Transportation. When construction results in only one paved traffic lane being open traffic, a minimum of two (2) flagmen with appropriate signs and protective equipment, shall be required to direct traffic through the construction zone. In certain cases pilot cars and or radio communication between flagmen
may be required.

Should the Contractor appear to be neglectful in furnishing, installing, and maintaining warning devices and taking protective measures as above provided, the City may direct attention to the existence of a hazard and the necessary warning devices shall be furnished, installed, and maintained and protective measures shall be taken by the Contractor at his expense. Should the City point out the inadequacy of warning devices and protective measures, such action on the part of the City shall not relieve the Contractor of his responsibility for furnishing and maintaining any of the protective facilities hereinbefore specified.

Roadside trees, shrubs, and other plants are not to be removed, unless removal is noted on the plans. Should tree roots be severed, thereby weakening their structure, the City may require trees to be removed, topped or trimmed for safety purposes. Pole lines, fences, signs, markers, monuments, buildings, structures, conduits, pipelines, sewer and water lines, all highway facilities, and any other improvement or facilities within or adjacent to the highway, under or above the ground, shall be protected from injury or damage. If such objects are injured or damaged by reason of Contractor's operations, they shall be replaced or restored at Contractor's expense. The facilities shall be replaced or restored to a condition as good as when the Contractor entered upon the work. The City may make or cause to be made such temporary repairs as necessary to restore to service damaged highway facility. The cost of such repairs shall be borne by the Contractor.

Where necessary for Public Safety and Convenience, Contractor shall, at his expense, provide and maintain suitable drainage of the roadway and erect such temporary structures as are necessary. The suspension of the work from any cause whatever shall not relieve the Contractor of his responsibility to provide for the safety and convenience of public traffic and local residents.

SECTION 8

GUARANTEE

The applicant shall by virtue of a bond, satisfactory to the City, guarantee the completed work against repairs caused by defective workmanship or materials furnished and installed for a period of two years from the date of acceptance by the City of the Dedication of Water Facilities.

The applicant shall furnish to the City a satisfactory bond in the amount of 100 percent of the total cost, upon a form furnished by the City to guarantee the fulfillment of such obligation.

Section	Title
4	
	Valve Boxes and Caps
	Fire Hydrant Assembly Installation
	Blowoff Assembly Installation
	Service Installation
	Concrete Blanket
	Thrust Blocks
	Flanged Fittings and Connections
	Flexible Couplings with Tie Details
	Connection with Existing System
	Steel Casing Installation
	Coal Tar Coatings
	Disinfection
5	PIPELINE FIELD TESTS
	General
	Pressure Tests
	Leakage Tests
	Compaction Test
6	Pavement Replacement General
	Construction Methods
	Base Material
	Pavement Repair
	Finish Paving
	Open Graded Paving
	Bitumious Seal Coat
	County Roads and State Highways
7	Public Convenience and Safety Public Convenience
	Public Safety
8 Guarantee	
P1 ate No.	
PLATES	
Title	
Legend	
Fire Hydrant Assen~bly	
Valve Box and Cap	
Blow Off Assembly	
Thrust Blocks	
Combination Air & Vacuum	
Valve Assembly	
Marker Post	
314" Through 2" Service	
Connection	
Pavement Repair -Trench Ex.	
Pavement Repair -Overlay	
Ex.	

LEGEND

--W--W--	Existing Water Pipe Line
--S--S--	Existing Sewer Line
--G--G--	Existing Gas Line
--E--E--	Existing Electrical Conduits
--C--C--	Existing Culvert Pipe
8"	Proposed Water Pipe Line & Size
S	Proposed Sewer Line
G	Proposed Gas Line and Services
E	Proposed Electrical Conduits
C	Proposed Culvert Pipe
	Fire Hydrant Assembly
	Valve
	Blowoff Assembly
	Domestic Service Line □1" Denotes Size of Outlet
	Air and Vacuum Assembly
A.C.P.	Asbestos Cement Pipe
D.I.	Ductile Iron Pipe
CL&C	Cement Lined & Coated Steel Pipe
3124.2	Invert Elevation of Proposed Main
FLG	Flanged
RT	Ring Tite Fitting
BF	Blind Flange
A.W.W.A.	American Water Works Association Standards
FH	Fire Hydrant
GV	Gate Valve
BFV	Butterfly Valve
PVC	Polyvinyl Chloride Pipe

CITY OF ADELANTO

C.M ENGINEERING ASSOCIATES
Mail P.O. Box 8097 - 92412
Phone (714) 864-8804 or (714) 825-9662
235 East Airport Drive, San Bernardino, California

LEGEND

PLATE

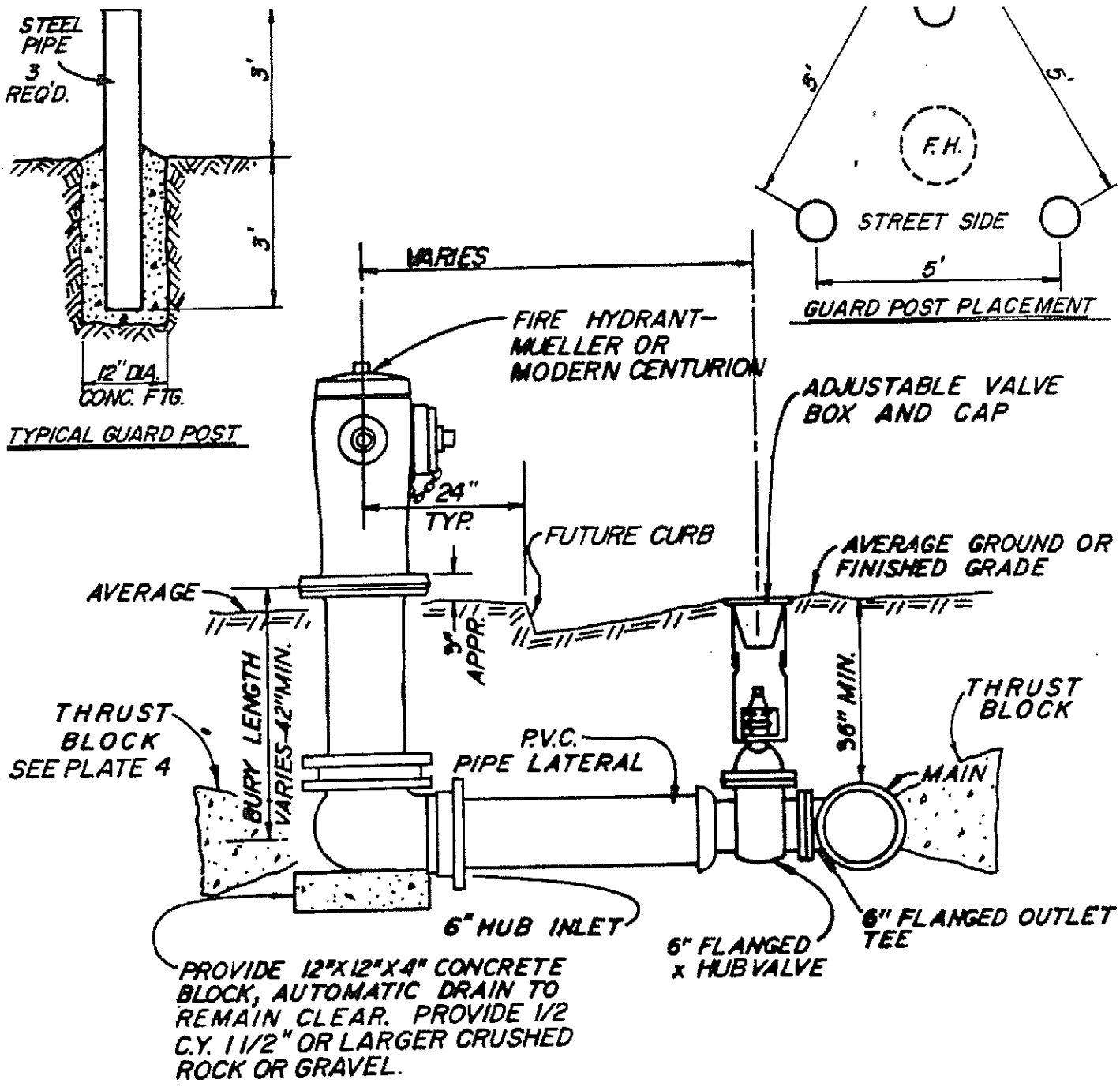

NOTE:

1. PAINT ABOVE GRADE PIPING WITH RUST-OLEUM 659 YELLOW OR APPROVED EQUAL: TWO COATS OVER RUST INHIBITIVE PRIMER.

CITY OF ADELANTO

C.M ENGINEERING ASSOCIATES
Mail P.O. Box 8087 - 92412
Phone (714) 864-8804 or (714) 825-9662
325 East Airport Drive, San Bernardino, California

FIRE HYDRANT ASSEMBLY

PLATE 1

CITY OF ADELANTO

AUG. 2005

WILSON F. SO
CITY ENGINEER

FIRE HYDRANT LOCATION AT CUL-DE-SAC

PLATE 1 - A

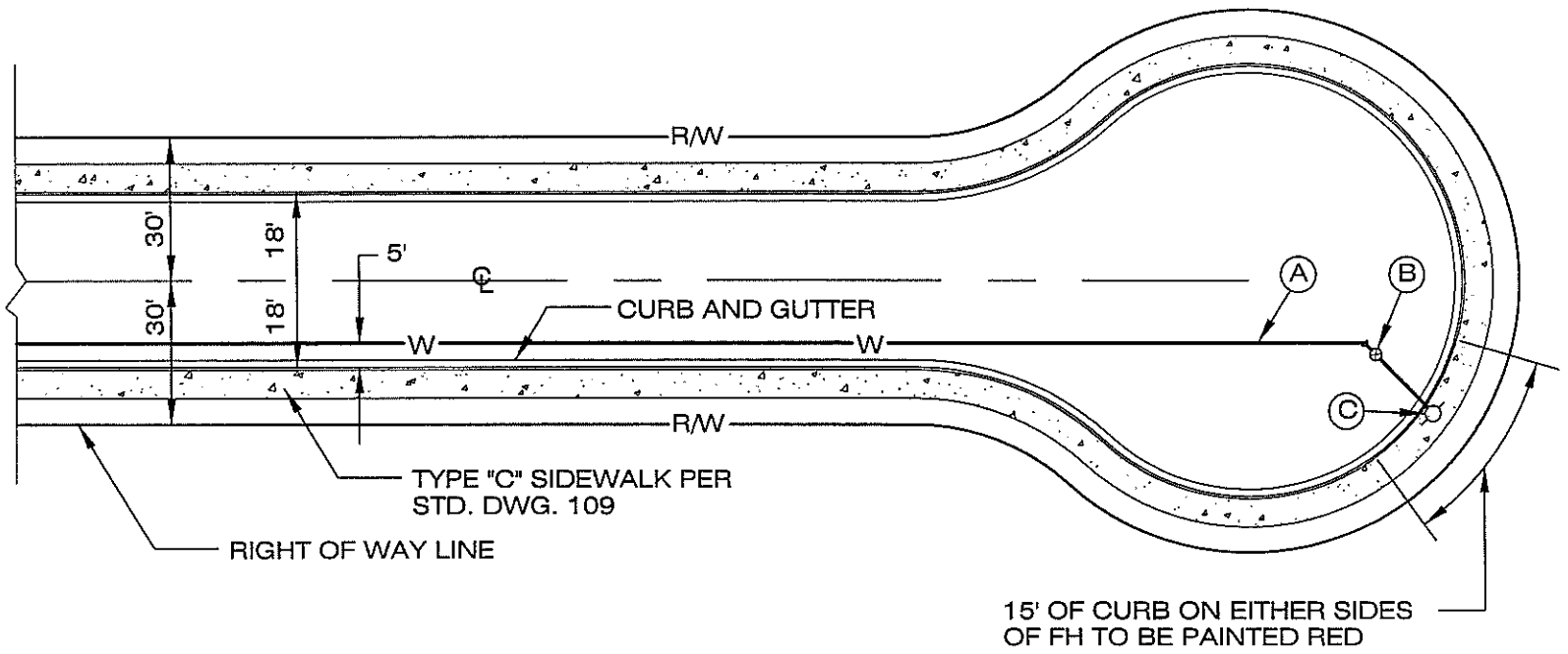

(A) NEW WATER PIPELINE

(B) 6" GATE VALVE

(C) FIRE HYDRANT LOCATED AT END OF LINE
ACTUAL LOCATION OF HYDRANT WILL
VARY SOMEWHAT DEPENDING ON
DRIVEWAY LOCATIONS

PLAN

SCALE: 1" = 40'-0"

106050099

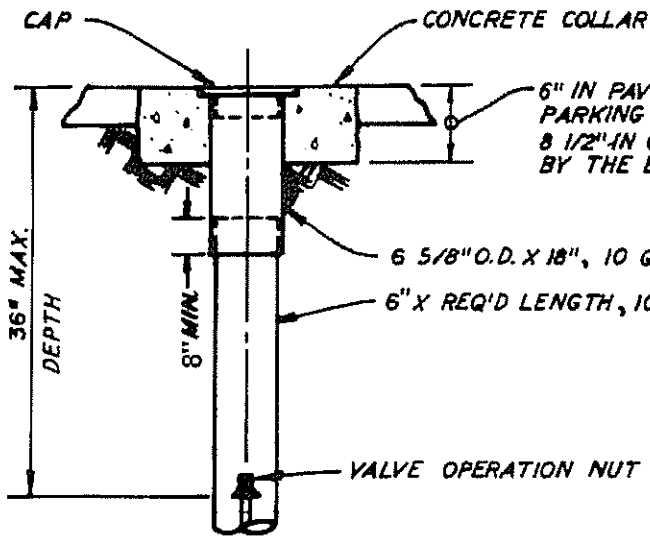

TYPICAL INSTALLATION STREET OR ALLEY

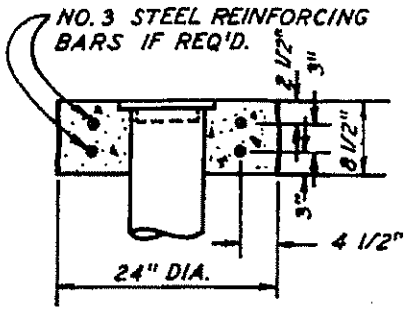

DETAIL "A"

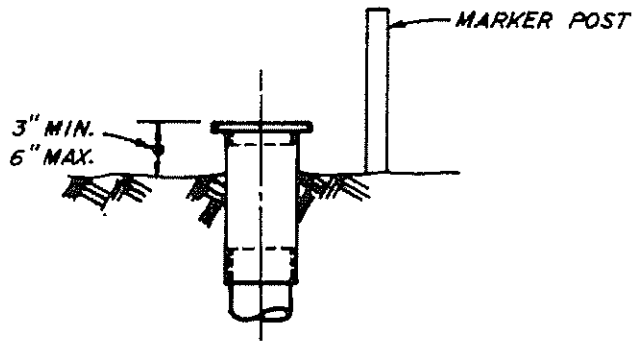

TYPICAL INSTALLATION UNTRAVELED AREAS

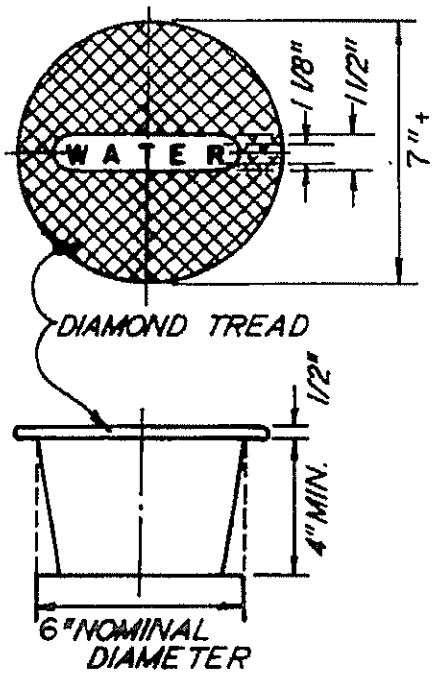

CAP

NOTE:-
WHERE VALVE OPERATING NUT IS GREATER THAN 36" BELOW THE SURFACE AN EXTENSION ROD FOR VALVE OPERATION WITH CIRCULAR CENTERING GUIDE, TO WITHIN 12" OF THE SURFACE WILL BE REQ'D.
IN UNPAVED TRAVELED AREAS CAP SHALL BE 8" TO 10" BELOW GRADE.

CITY OF ADELANTO

ENGINEERING ASSOCIATES
Mail P. O. Box 8087 . 92412
Phone (714) 864-8804 or (714) 825-9662
325 East Airport Drive, San Bernardino, California

VALVE BOX & CAP

PLATE
2

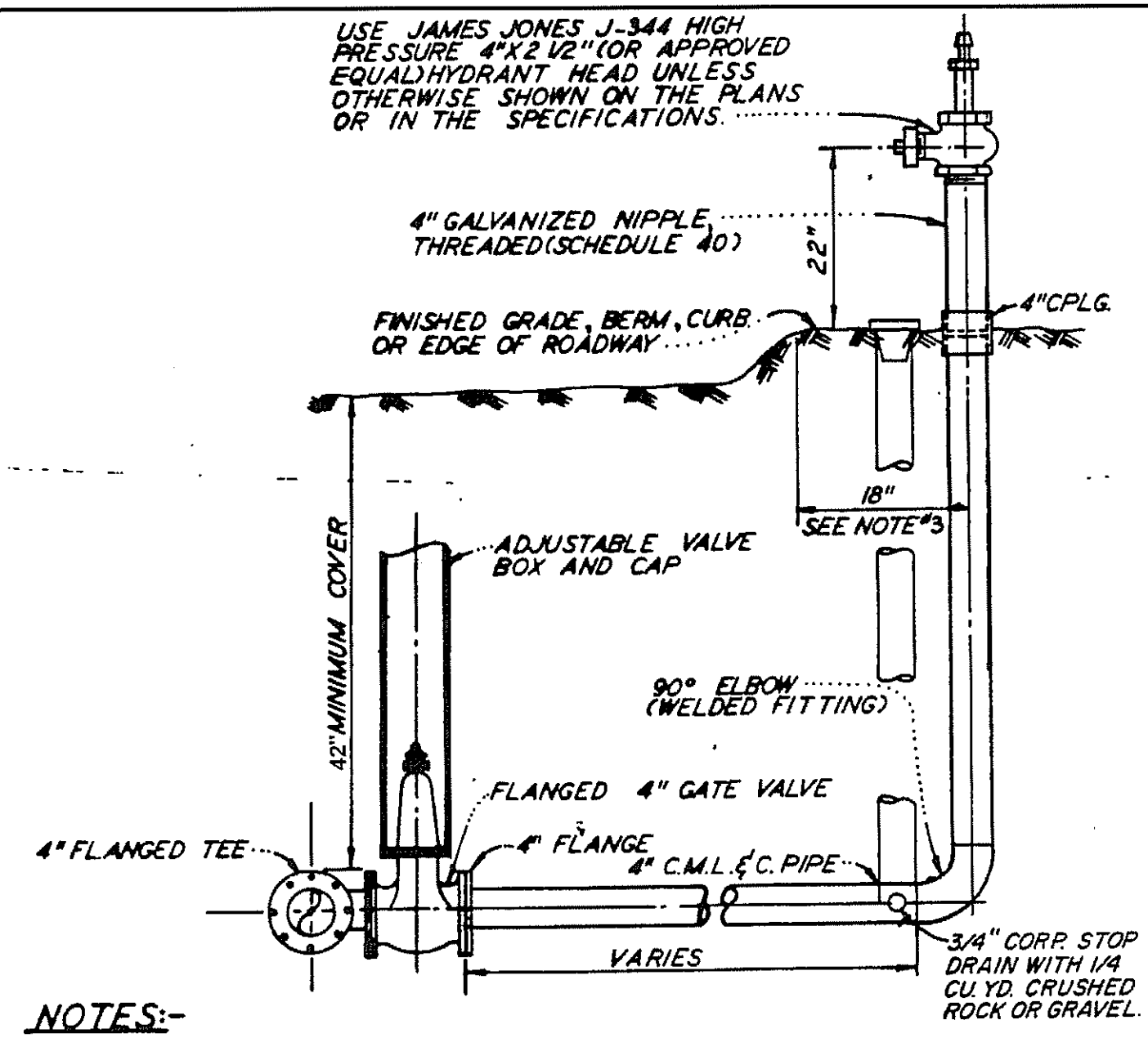

NOTES:-

1. HYDRANT TO BE PAINTED WITH RUST-OLEUM 659 YELLOW OR APPROVED EQUAL. TWO COATS OVER RUST INHIBITIVE PRIMER.
2. ALL FLANGES SHALL BE FULL WELDED (DOUBLE PASS) AND COATED IN THE FIELD AS PER SPECIFICATIONS.
3. HYDRANT PLACEMENT
   A. CURB AND SIDEWALK SEPARATED: HYDRANT TO BE 18" BEHIND CURB AS SHOWN.
   B. CURB AND SIDEWALK ADJACENT: HYDRANT TO BE 18" BEHIND SIDEWALK BUT NOT LESS THAN 6" WITHIN THE ROAD RIGHT OF WAY.
   C. NO CURBS OR SIDEWALKS PROPOSED: HYDRANT TO BE 18" WITHIN THE ROAD RIGHT OF WAY.
4. HYDRANT LOCATION: AS SHOWN ON PLANS OR AS DIRECTED BY ENGINEER.

CITY OF ADELANTO

C.M. ENGINEERING ASSOCIATES
Mail P. O. Box 8087 . 92412
Phone (714) 864-8804 or (714) 825-9662
235 East Airport Drive, San Bernardino, California

BLOW OFF ASSEMBLY

PLATE
3

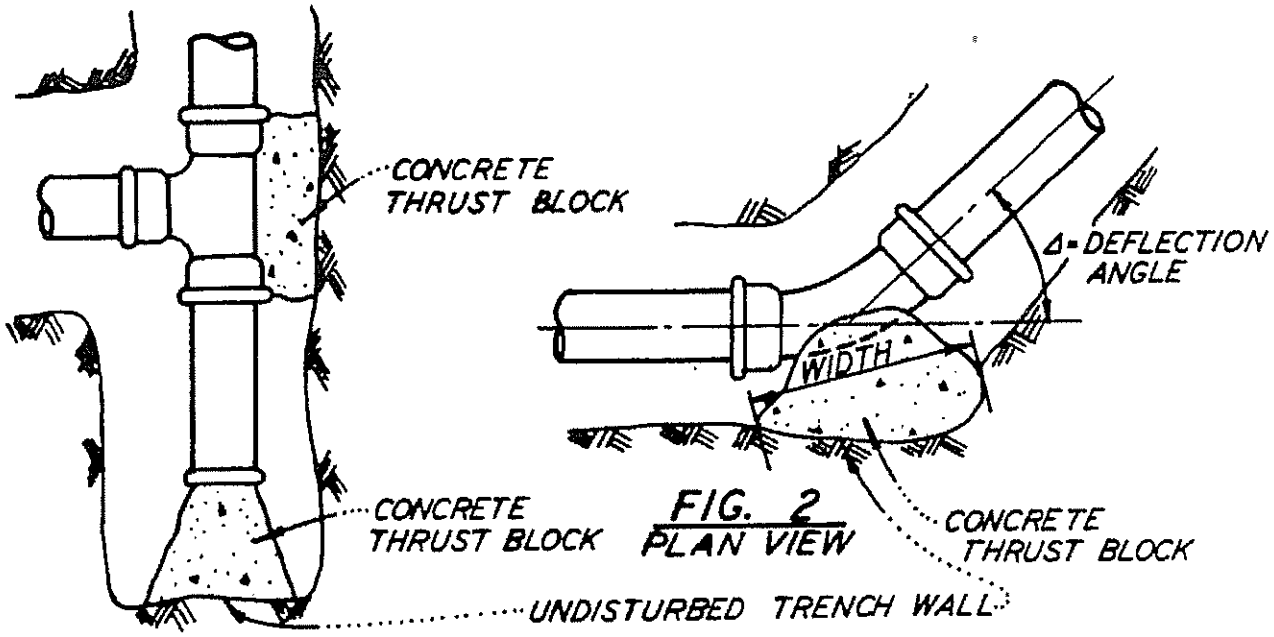

FIG. 1
PLAN VIEW

FIG. 2
PLAN VIEW

AREA'S IN TABLE ARE BASED ON SAND WITH A BEARING VALUE OF 1000 LB./FT^2
FOR SOFT CLAY (500 LB./FT^2) USE 2.0X VALUE FROM TABLE.
FOR SAND & GRAVEL (1500 LB/FT^2) USE 0.7 x VALUE FROM TABLE.
FOR SAND & GRAVEL CEMENTED WITH CLAY (2000 LB/FT^2) USE 0.5x VALUE FROM TABLE.
FOR SHALE, SANDSTONE, OR CONGLOMERATE (4000 LB./FT^2) USE 0.25x VALUE FROM TABLE.

PIPE DIAMETER INCHES	BEARING AREA- SQ. FEET CLASS 150 (TEST PRESSURE =175 P.S.I)				
	FIG. 1 TEES & DEAD ENDS	FIG. 2			
		Δ = 90°	Δ = 45°	Δ = 22 1/2°	Δ = 11 1/4°
4	2	3	2	1	0
6	5	7	4	2	1
8	9	12	7	4	2
10	14	20	11	6	3
12	20	28	15	8	4
16	35	50	27	14	7
18	44	63	34	18	9
24	79	112	61	32	16

CITY OF ADELANTO

ENGINEERING ASSOCIATES
Mail P. O. Box 8097 - 92412
Phone (714) 884-8804 or (714) 825-9662
235 East Airport Drive, San Bernardino, California

THRUST BLOCKS

PLATE
4

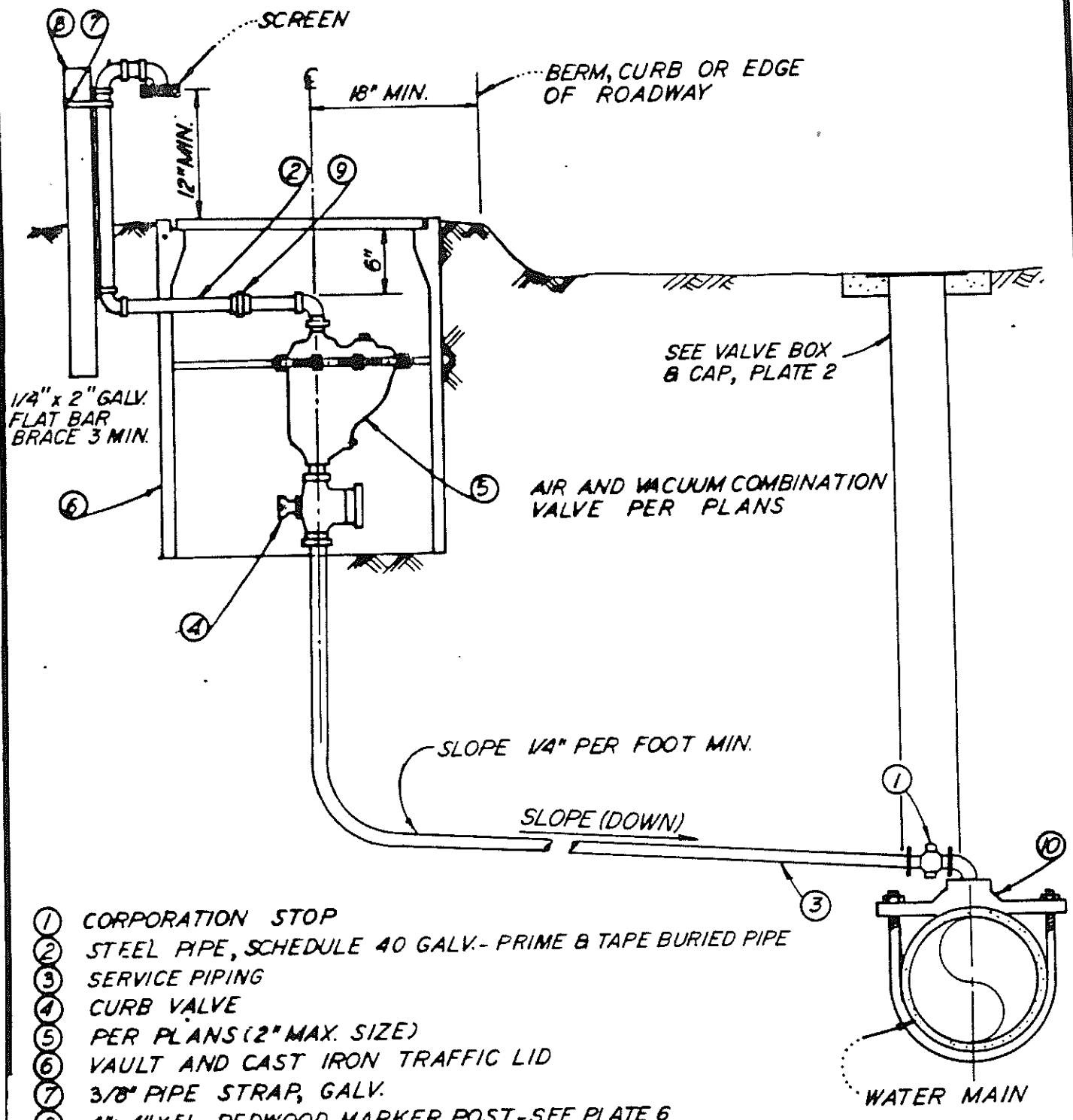

1. CORPORATION STOP
2. STEEL PIPE, SCHEDULE 40 GALV.- PRIME & TAPE BURIED PIPE
3. SERVICE PIPING
4. CURB VALVE
5. PER PLANS (2" MAX. SIZE)
6. VAULT AND CAST IRON TRAFFIC LID
7. 3/8" PIPE STRAP, GALV.
8. 4"x4"x5' REDWOOD MARKER POST - SEE PLATE 6
9. UNION
10. DOUBLE STRAP SADDLE

NOTE:-

1. SIZE OF PIPE FITTINGS AND VALVES SHALL CONFORM TO THE SIZE OF THE AIR AND VACUUM VALVE.
2. PAINT ABOVE GRADE PIPING WITH RUST-OLEUM 659 YELLOW OR APPROVED EQUAL. PRIMER & 2 COAT.

CITY OF ADELANTO

ENGINEERING ASSOCIATES
Mail P. O. Box 9087 : 92412
Phone (714) 884-8804 or (714) 825-9642
825 East Airport Drive, San Bernardino, California

COMBINATION AIR & VACUUM VALVE ASSEMBLY

PLATE 5

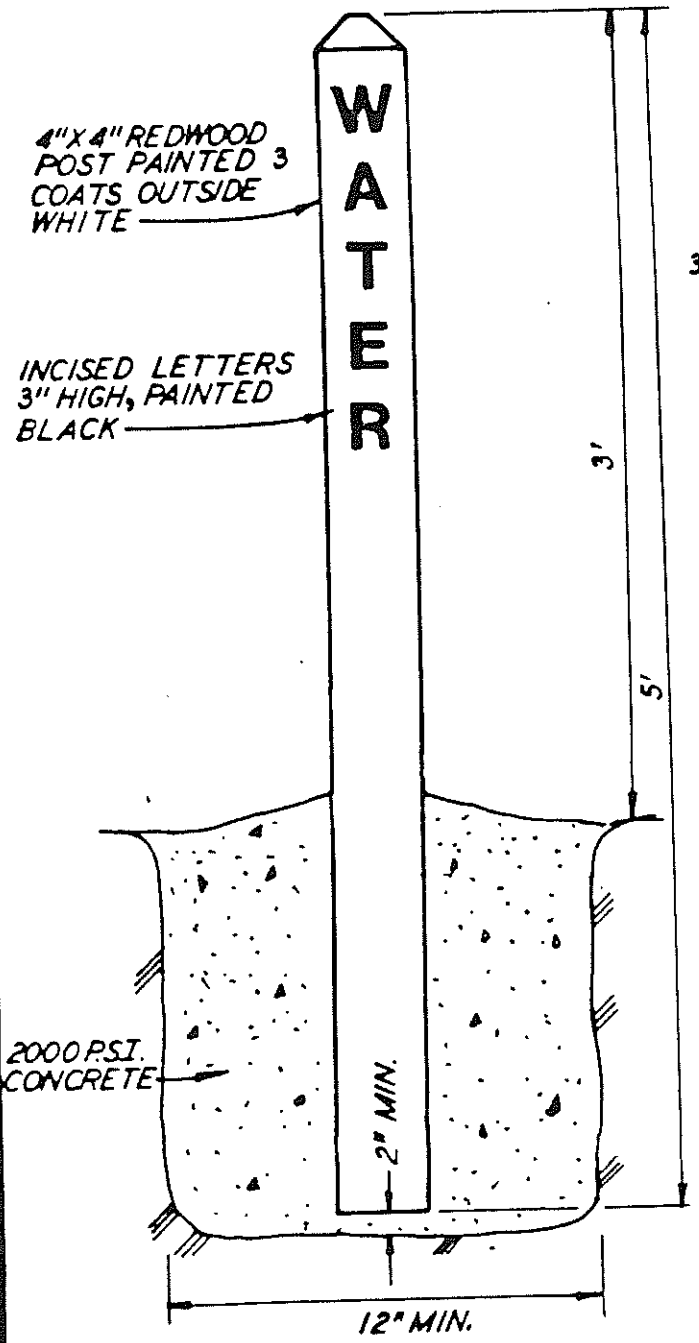

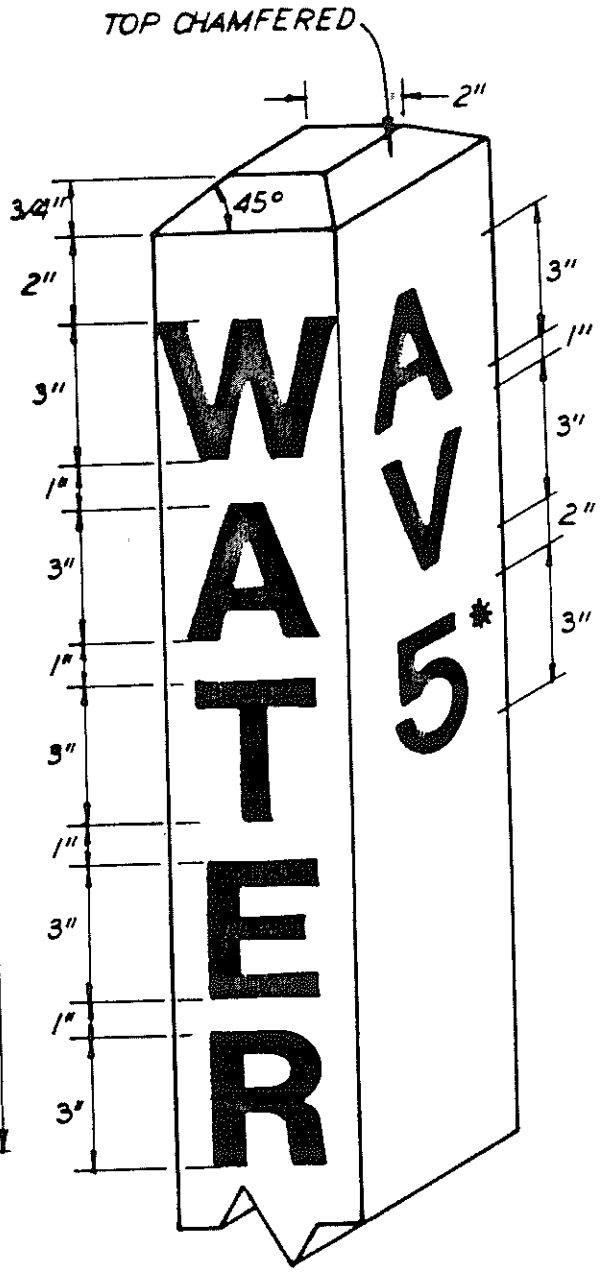

* DIST. TO ITEM REFERENCED

WL = WATER LINE
GV = GATE VALVE
PR = PRESSURE REGULATOR
BV = BUTTERFLY VALVE
AV = AIR VALVE
EB = ELECTRICAL BOXES

CITY OF ADELANTO

CM ENGINEERING ASSOCIATES
[illegible] P. O. Box [illegible] · [illegible]
Phone (714) [illegible] or (714) [illegible]
[illegible] Airport Drive, San Bernardino, California

MARKER POST

PLATE 6

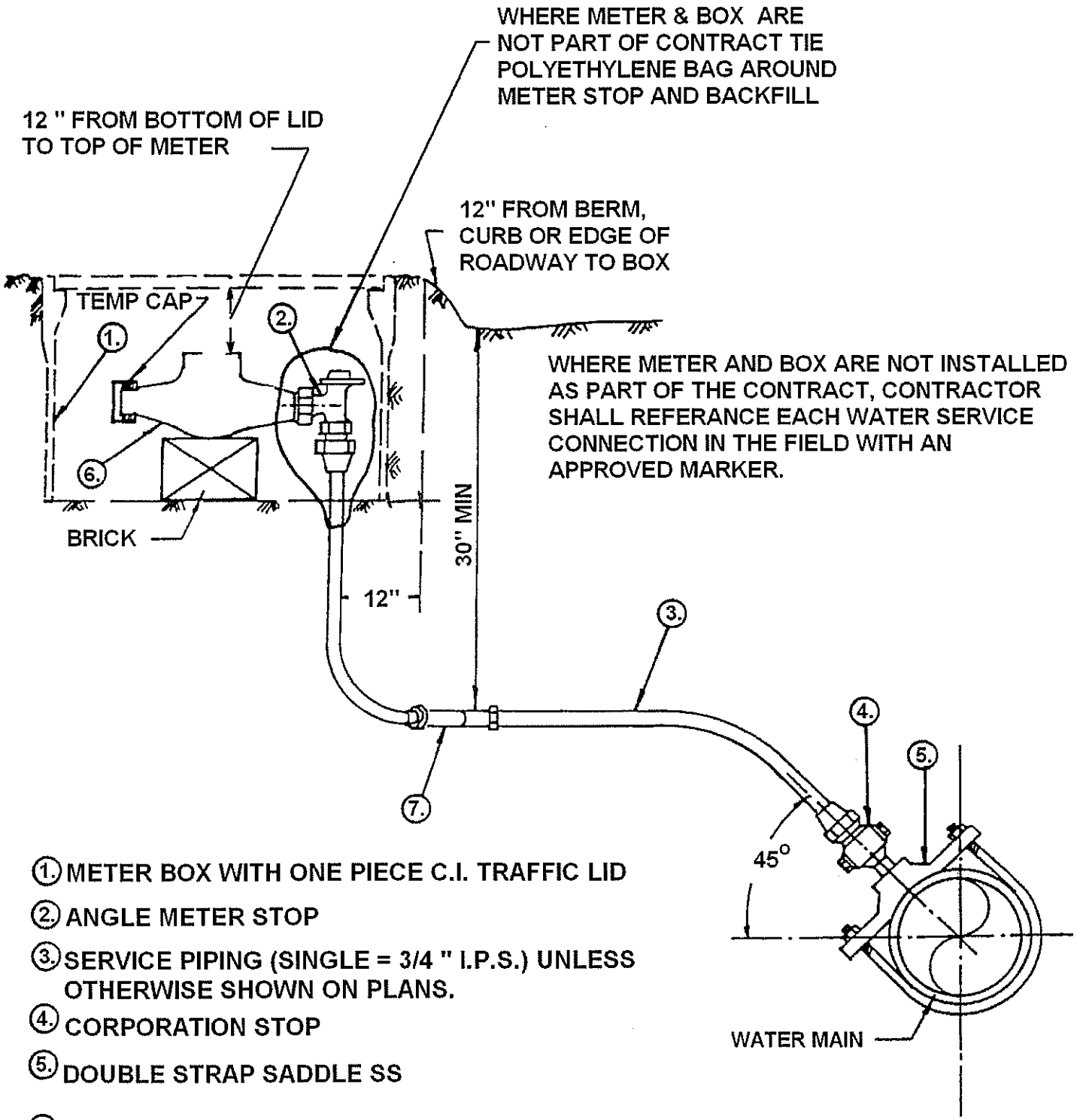

WHERE METER AND BOX ARE NOT INSTALLED AS PART OF THE CONTRACT, CONTRACTOR SHALL REFERANCE EACH WATER SERVICE CONNECTION IN THE FIELD WITH AN APPROVED MARKER.

1. METER BOX WITH ONE PIECE C.I. TRAFFIC LID
2. ANGLE METER STOP
3. SERVICE PIPING (SINGLE = 3/4 " I.P.S.) UNLESS OTHERWISE SHOWN ON PLANS.
4. CORPORATION STOP
5. DOUBLE STRAP SADDLE SS
6. METER CENTERED WITHIN THE BOX
7. JONES J-2201 13.5" WIDE

CITY OF ADELANTO

ENGINEERING ASSOCIATES
Mail: P. O. Box 8087 · 92412
Phone (714) 864-8804 or (714) 825-9662
335 East Airport Drive, San Bernardino, California

3 / 4" THRU 2" SERVICE CONNECTION

PLATE 7

CITY OF ADELANTO

PAVEMENT REPAIR
TRENCH EXAMPLE

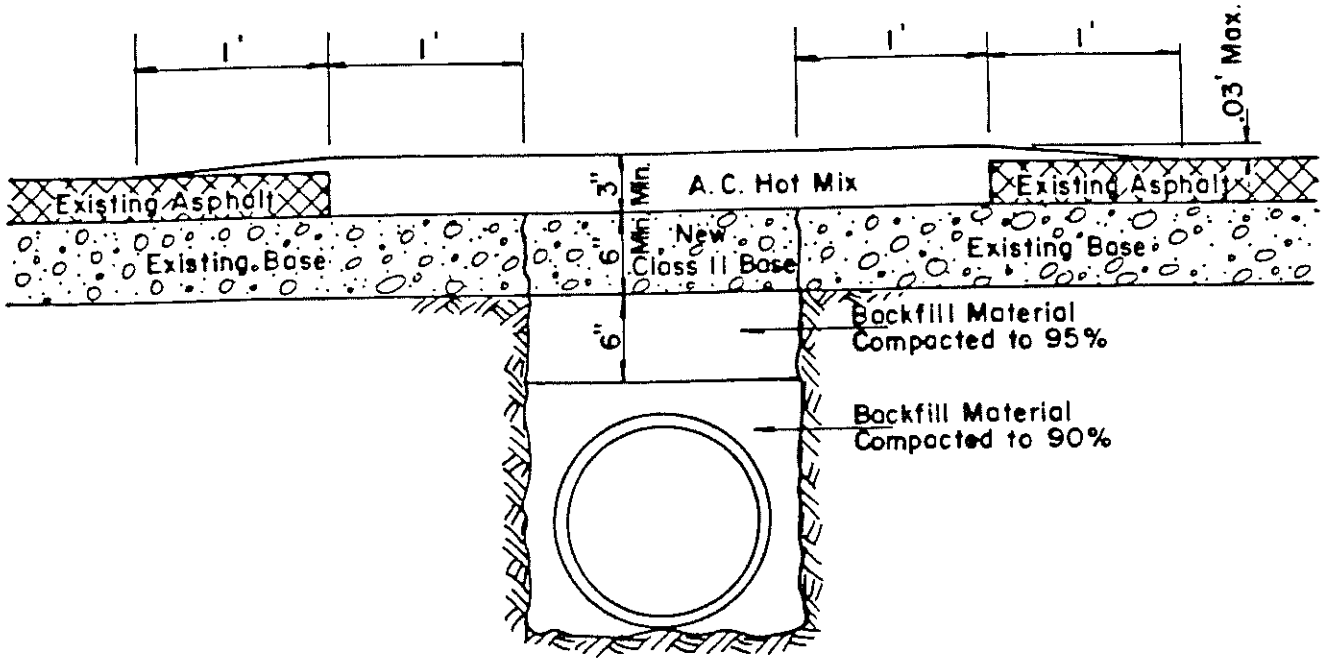

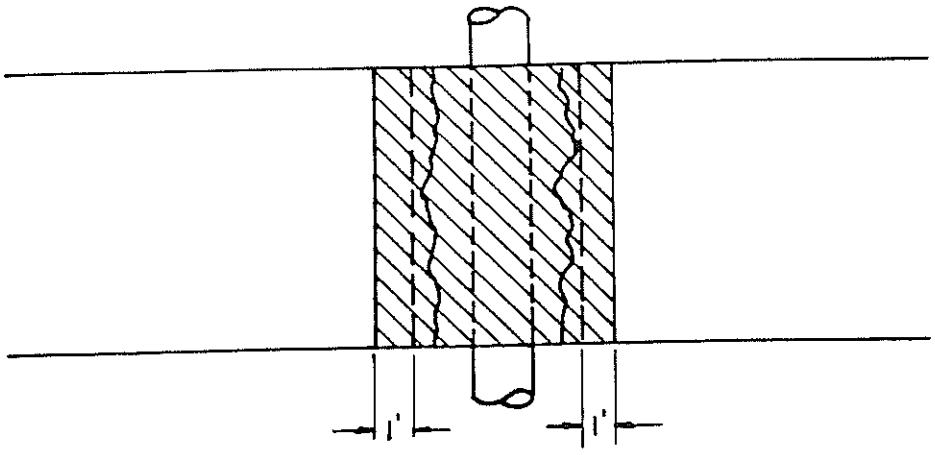

Patch Limits one foot outside damaged pavement.

PLATE 8

CITY OF ADELANTO

PAVEMENT REPAIR
OVERLAY EXAMPLE

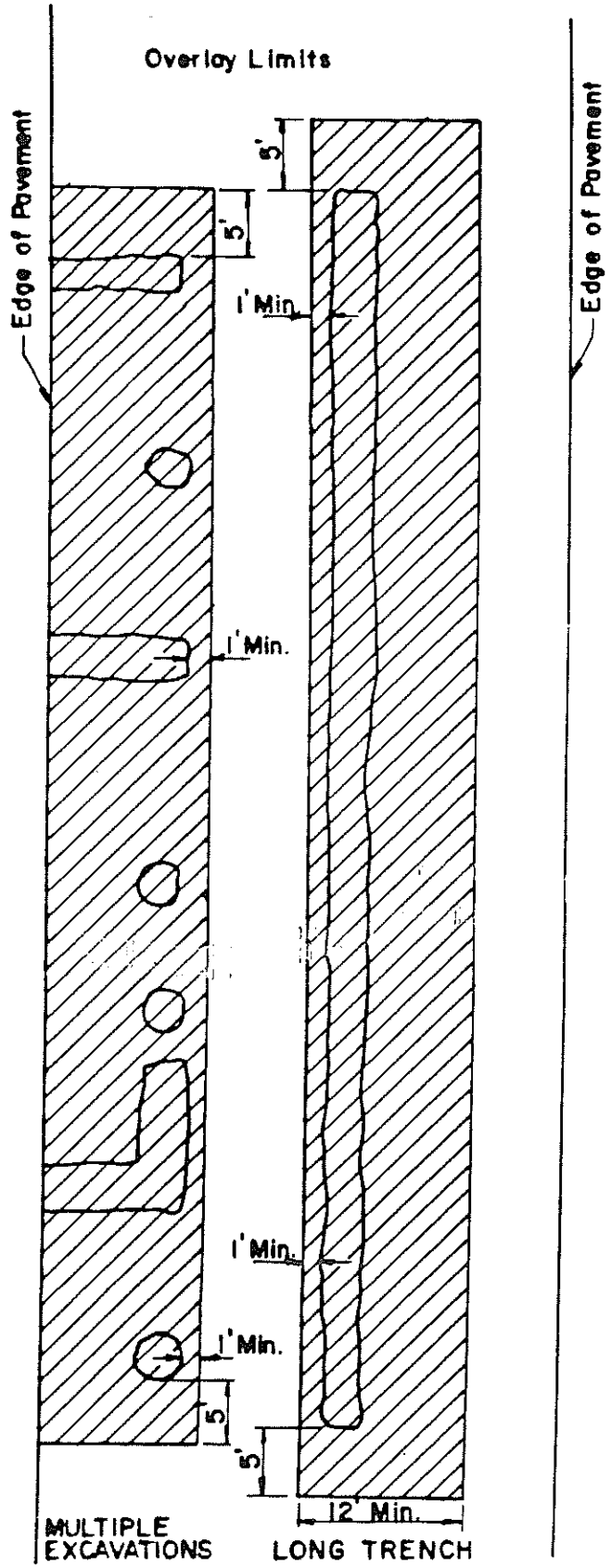

PLATE 9